527

Manual of AMC Series intelligent power collection and monitoring device

Installation and Operation Instruction V3.11

ACREL Co., Ltd.

DECLARATION

No part of this publication may be reproduced, stored in a retrieval system, or transmitted in any form by any means, electronic, mechanical photocopying, recording, or otherwise without prior permission of Acrel. All rights reserved.

This company reserve power of revision of product specification described in this manual, without notice. Before ordering, please consult local agent for the latest specification of product.

CONTENTS

1. General 1
2. Type and specification of products 1
3. Technical parameters 2
4 Installation wiring instructions 3
4.1 Outline and mounting cutout size 3
4.2 Installation method 4
4.3 Wiring method 5
5. Operating inst 8
5.1 Explanation for keypad functionality 8
5.2 Display Example 10
5.3 Programming menu 16
5.4 Programming example 18
6 Communication 23
6.1 General 23
6.2 Agreement 23
6.3 Message example 24
6.4 Register listing(MODBUS-RTU) 24
6.5 Communication application 44
7 Common fault analysis 46

1.General

AMC series intelligent power collection and monitoring device is a smart meter designed for power moni toring needs of power systems, industrial and mining enterprises, utilities, and intelligent buildings. It integrates measurement of power parameters (such as single-phase or three-phase current, voltage, and active power). Power, reactive power, apparent power, frequency, power factor) and power monitoring and assessment management. At the same time, it has a variety of peripheral interface functions for users to choose: with RS485 communication interface, MODBUS-RTU protocol can meet the needs of communication network management; 4-20mA analog output can correspond to measured electrical parameters, meet DCS Such interface requirements; with switch input and relay output can realize the function of "remote signal" and "remote control" of circuit breaker switch. High-brightness LED/LCD display interface, parameter setting and control through buttons, ideal for real-time power monitoring systems. Can directly replace conventional power transmitters and measuring instruments. As an intelligent, digital front-end acquisition component, the instrument has been widely used in various control systems, SCADA systems and energy management systems.

2.Type and specification of products

Picture 1

Meter type	Basic function	Optional function	Co-selectio n function
AMC72L-E4/KC	Three phase voltage, Zero sequence voltage Three phase current, Zero sequence current Three phase active power, Total active power Three phase reactive power, Total reactive power Three phase apparent power, Total apparent power Three phase Power factor, Total power factor Frequency, Voltage phase angle, Voltage and current imbalance,Forward and reverse power Four quadrant energy metering,System time display 1 channel RS485 interface / Modbus-RTU protocol and the statute DLT645.	①2DI+2DO+1Ep(K) ②4DI+2DO(K) ③Compound rate(F) ④T2-31 th and total harmonics measurement (H) ⑤2DI+2DO+1M(KM)	①③④ ②③④ ③④⑤
AMC72-E4/KC		①2DI+2DO+1Ep(K) ②4DI+2DO(K) ③Event record (SOE) ④T2-31 th and total harmonics measurement (H) ⑤2DI+2DO+1M(KM)	①③④ ②③④ ③④⑤
AMC96L-E3/KC AMC96L-E4/KC	Three phase voltage, Zero sequence voltage Three phase current, Zero sequence current Three phase active power, Total active power Three phase reactive power, Total reactive power Three phase apparent power, Total apparent power Three phase Power factor, Total power factor Frequency, Voltage phase angle, Voltage and current imbalance,Forward and reverse power Four quadrant energy metering,System time display 1 channel RS485 interface / Modbus-RTU protocol and the statute DLT645.	①4DI+2DO+1Ep(K) ②2DI+2DO+1Ep(K) ③Compound rate(F) ④2-31th harmonic measurement (H) ⑤2-channel analog output (2M) ⑥1-channel analog output (M) ⑦2DI(220V)+2DO+1EP(KA)	①③④ ②③④⑤ ②③④⑥ ④+⑦
AMC96-E3/KC AMC96-E4/KC		①4DI+2DO+1Ep(K) ②2DI+2DO+1Ep(K) ③Event record (SOE) ④2-31th harmonic measurement (H) ⑤2-channel analog output (2M) ⑥1-channel analog output (M) ⑦2DI(220V)+2DO+1EP(KA)	①③④ ②③④⑤ ②③④⑥ ④+⑦

AMC72-E/KC AMC72L-E/KC	single-phase voltage，single-phase current active power, reactive power, apparent power Power factor Frequency Four quadrant energy metering,System time display 1 channel RS485 interface / Modbus-RTU protocol and the statute DLT645.	①2DI+2DO+1Ep(K) ②4DI+2DO(K) ③Event record (SOE) ④Total harmonic measurement (H) ⑤2DI+2DO+1M(KM)	①③④ ②③④ ③④⑤

Note:

1.DI--Switching input, DO--Switching output, M--Analog output, SOE--Event recording, H--Harmonic measurement, Ep--Electric energy pulse，96--96 outlian,72--72outlian,L-liquid-crystal display（White space is a nixie tube display),E3-Three-phase three-wire electric energy,E4-Three-phase four-wire electric energy， K-Switching quantity input/output module(I/O module),C-RS485 communication,F-Compound rate(optional)， KA-switching value active DI input/passive output module.

2.When the digital tube is displayed, the harmonic data is not displayed, and the data is read only by communication.

3. K is a required function，Choose from ①②.

4. The functions of Soe Event Record (, extremum record and maximum requirement (d) are provided when the function F is selected, and the functions of extremum record and maximum requirement (d) are provided when the function of Soe Event Record is selected.

5. KA：2-way AC 220V mains power or oil engine signal access.

3. Technical parameters

Picture 2

Technical parameters		Value
Input	Connection	Single phase-2-wire, 3-phase-3-wire, 3-phase-4-wire
	Frequency	45-65Hz
	Voltage	Rating: single-phase :AC 100V、400V Three-phase: AC 3×57.7V/100V(100V)、3×220V/380V(400V)、3×380V/660V(660V)(96 size only)
		Overload:1.2 fold rating {continuous) : 2 fold rating for 1 second
		Power consumption:< 0.5VA
	Current	Rating: AC IA、5A
		Overload:1.2 fold rating(continuous);10fold rating for 1 second
		Power consumption:< 0.5VA
Output	Electric energy	Output mode:open-collector photo-coupler pulse
		Pulse constant: 10000imp/kWh(settable)，see wiring diagram for details；
	Communication	RS485port, Modbus -RTU protocol,DLT645 protocol(versions 07 and 97)，baud rate 1200 ~ 38400
Function	Switching input	Dry contact input, built-in power supply;if the model is KA,it is AC 220V active.
	Switching output	Output mode: Relay normally open contact output
		Contact capacity: AC 250V/3A、 DC 30V/3A
	Analog output	4 - 20mA
Accuracy class		Frequency:0.05Hz,Current、Voltage:0.2 class,Reactive power:l .0class,Reactive Electric energy:l .0class, active power:0.5class,active electric energy:

		0.5class,2-31th harmonic measurement:±1%
Power supply		AC/DC 85-265V or DC24V（±20%）or DC48V(±20%) power consumption≤10VA
Security	Power frequency withstand voltage	Between Power supply//Switching Output// Current Input//voltage Input and Transmitting// Communication //Pulse Output//switching input AC 2 kV 1min; Between Power supply、switching output、Current Input、voltage Input AC 2 kV 1min; Between Transmitting、Communication、Pulse Output、switching input AC 1kV 1 min;
	Insulation resistance	Input、Output end to machine enclosure >100MΩ
Environment	Temperature	work: -25°C~+65°C storage: -40°C ~+80°C
	Humidity	≤93%RH Non-condensing
	Altitude	≤2500m

Note: The instrument Modbus RTU is compatible with dlt645 and only needs to set the corresponding address. See Chapter 6.4 for details.

4 Installation wiring instructions

4.1 Outline and mounting cutout size

Picture 3

Outline	faceplate size		housing size			cutout size	
	width	height	width	height	depth	width	height
72 square	75	75	66.5	66.5	94.3	67	67
96 square	96	96	86.5	86.5	77.8	88	88

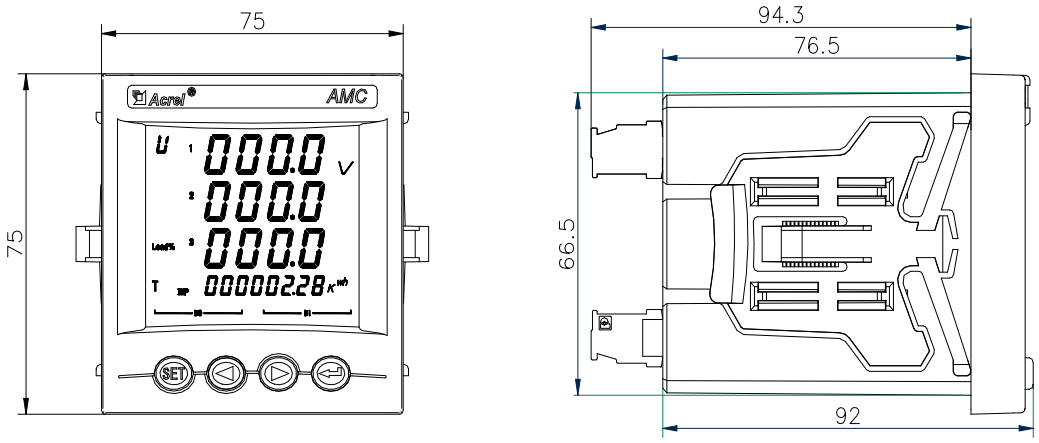

Figure 1 AMC72 appearance size

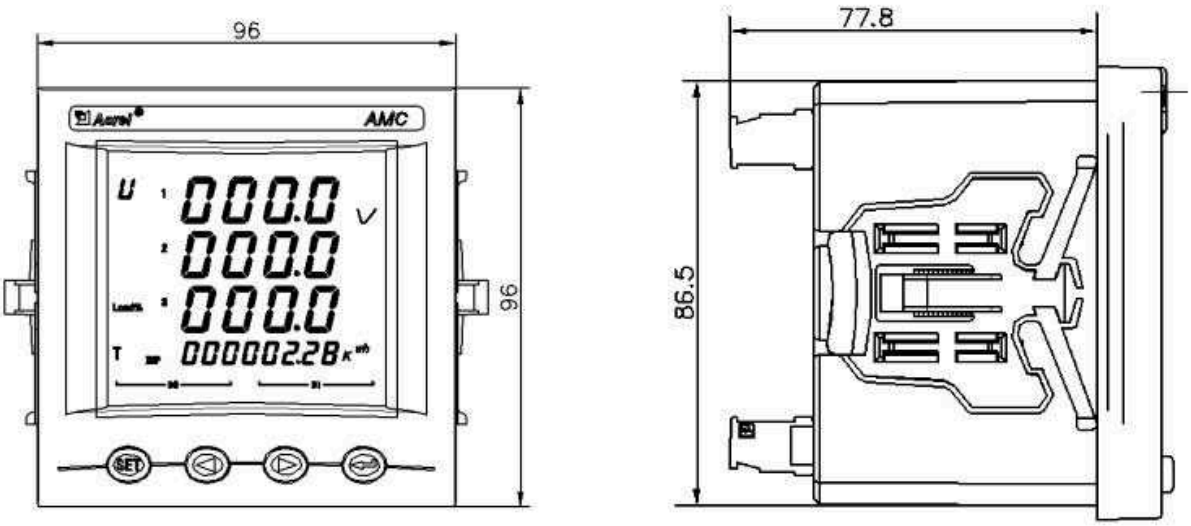

Figure 2 AMC96 appearance size

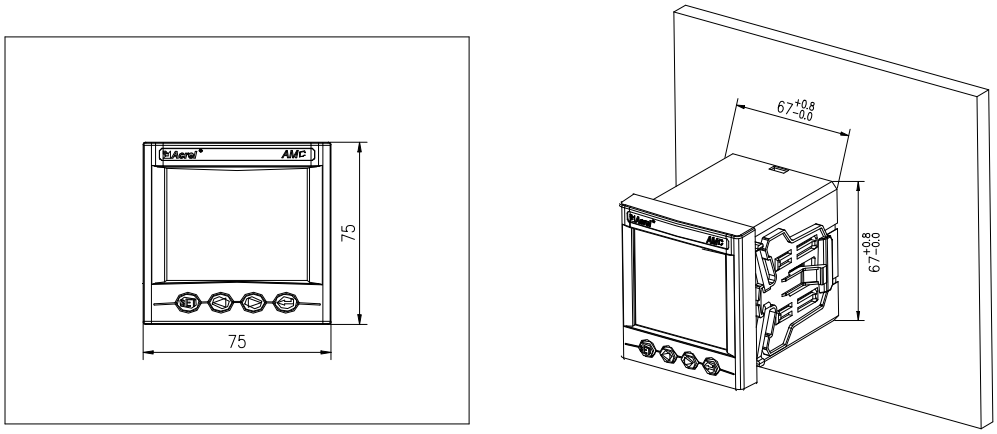

Figure 3 AMC72 installation dimensions

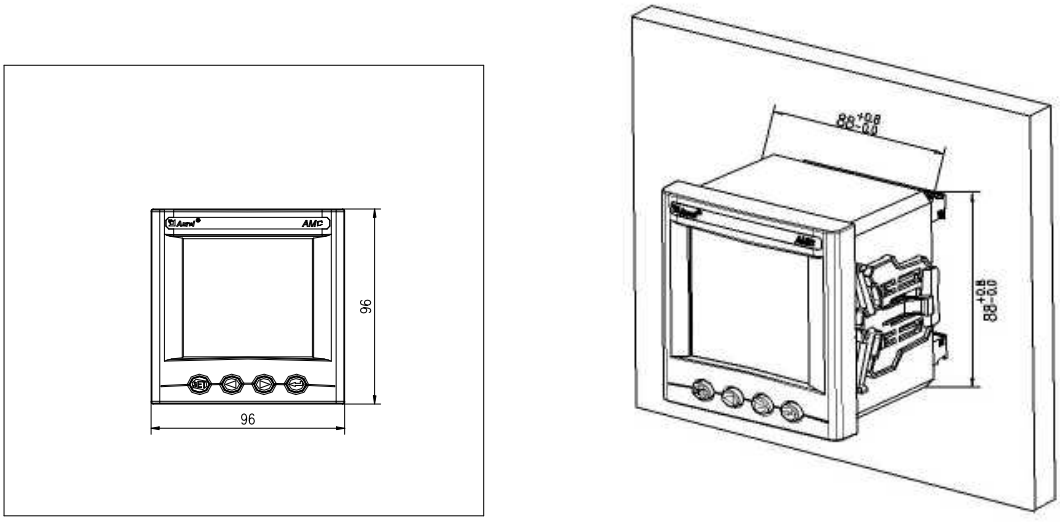

Figure 4 AMC96 installation dimensions

4.2 Installation method

1)Opening in fixed distribution cabinet

2)Take out the instrument and take out the clip

3) The instrument is mounted from the Front to the mounting hole, as shown in figure 5

4) Insert the instrument clasp to secure the instrument, as shown in figure 6

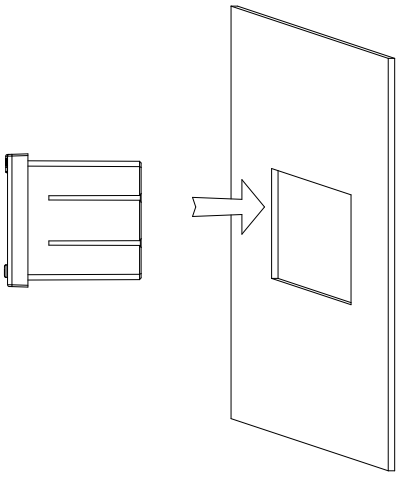

Figure 5

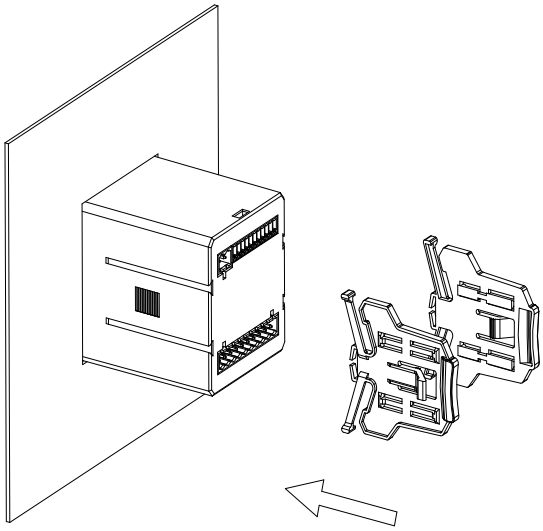

Figure 6

4.3 Wiring method

According to varied design requirements, power and voltage input terminals are recommended with fuse(BS88 3-5A gG) to meet with the safety performance requirements of prevailing electric codes.

4.3.1 Instrument terminal block and wiring method

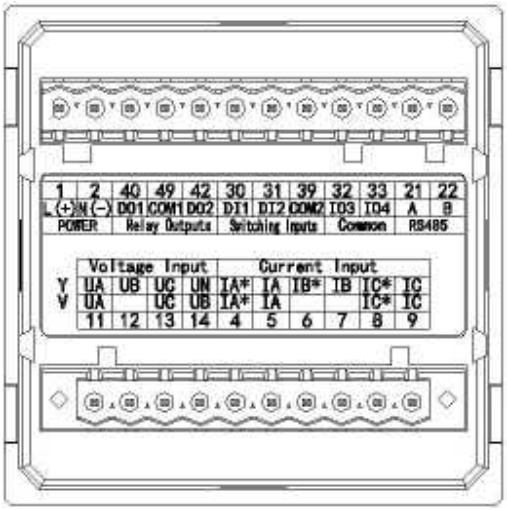

three-phase

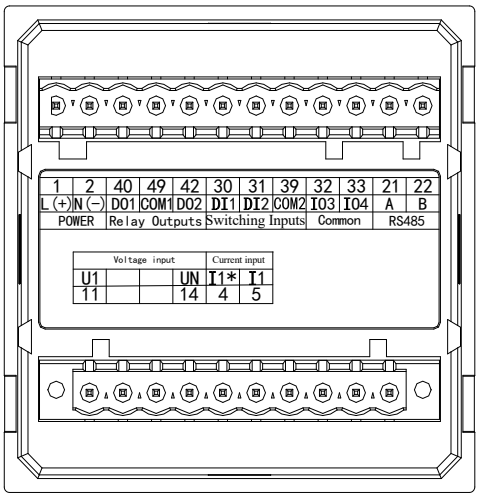

single-phase

Figure 7 AMC72 series terminal block diagram

Note: Switching input: 32 - DI3, 33 - DI4;

pulse output: 32 - E +, 33 - E-.

Analog output：32-AO，33-COM3.

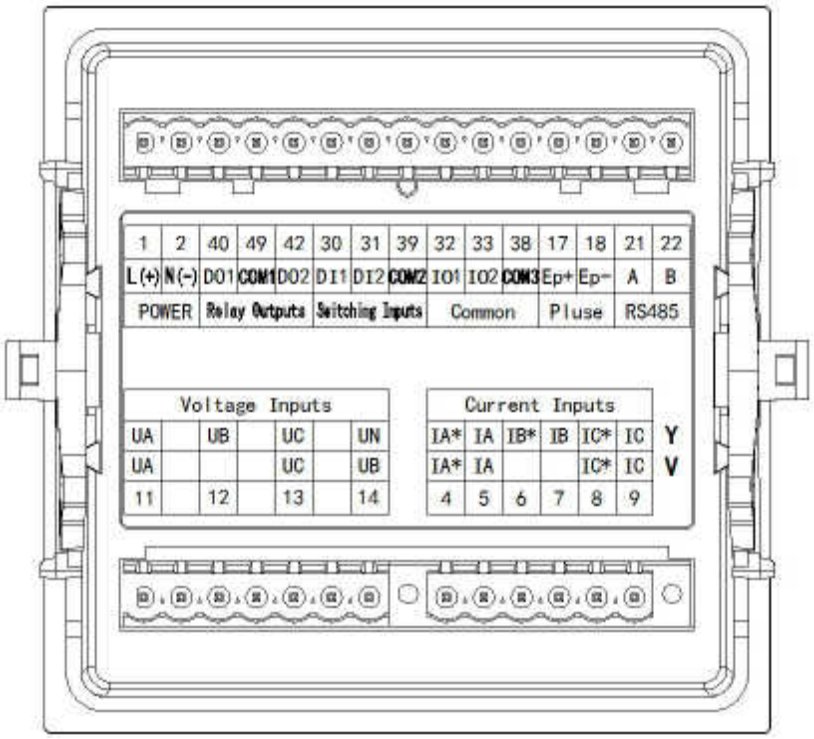

Figure 8 AMC96 series terminal block diagram

Note:

Switching input: 32——DI3, 33——DI4, 38——COM3;

pulse output: 32——AO1,33——AO2,38——COM3.

If it is connected to active DI，then it is 30,31,39.

4.3.2 Instrument signal terminal wiring method

Signal terminal: "4,5,6,7,8,9" is the terminal number of the current input; "11,12,13,14" is the terminal number of the voltage input.

Single-phase:

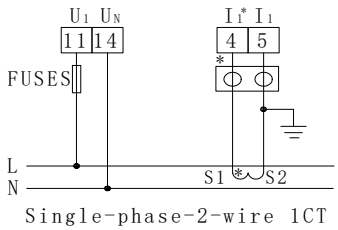

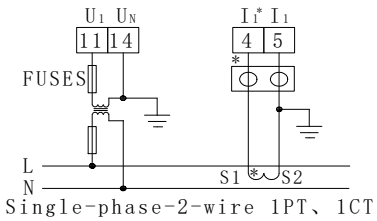

Three-phase

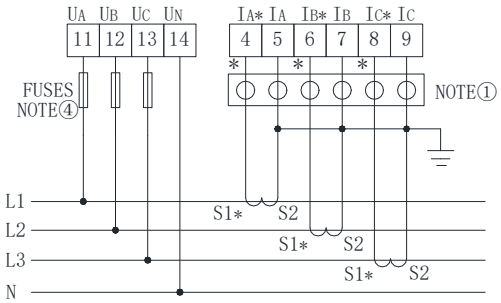

3P4L/3CT(Meter set as 3P4L)

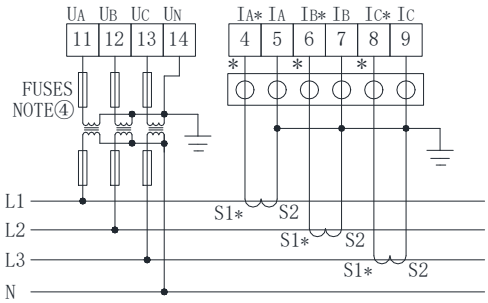

3P4L/3PT+3CT(Meter set as 3P4L)

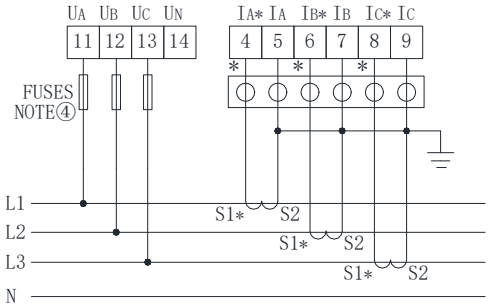

3P3L/3CT(Meter set as 3P4L) NOTE②

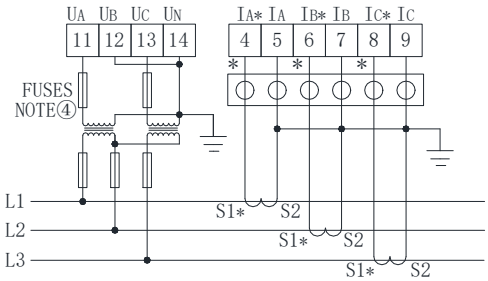

3P3i/2PT+3CT(Meter set as 3P3i) NOTE③

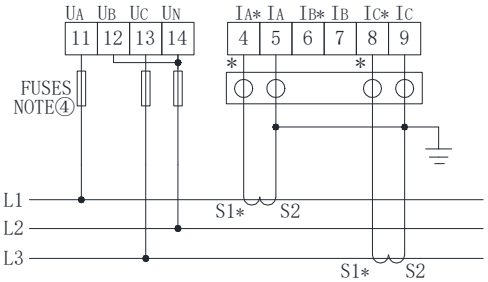

3P3L/2CT(Meter set as 3P3L)

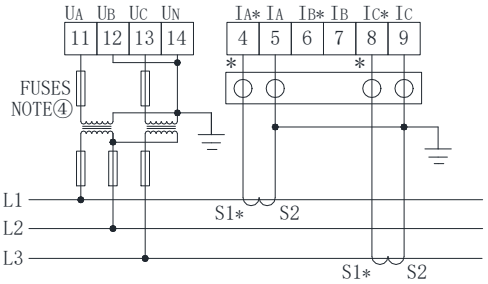

3P3L/2PT+2CT-1(Meter set as 3P3L)

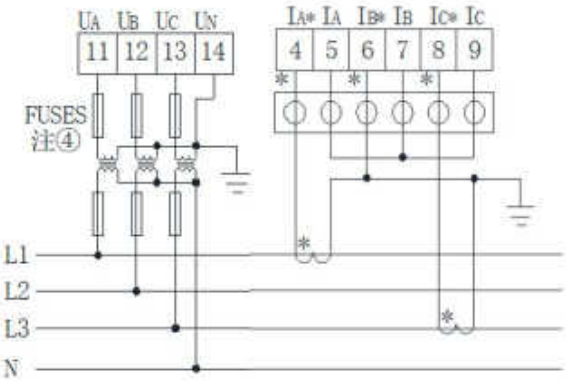

3P4L/3PT+2CT(Meter set as 3P4L)

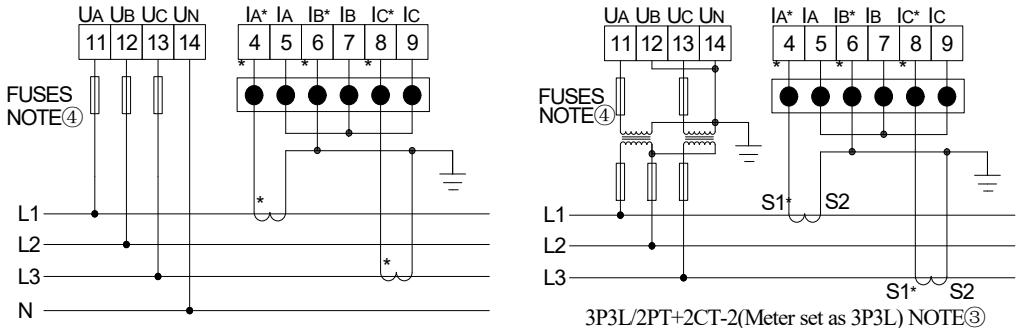

NOTE①: ○○○○○○ is the test terminal for CT secondary side short circuit.

NOTE②: only applicable to three-phase balanced load.

NOTE③: phase B displays only current and does not participate in other electricity calculation.

NOTE④: FUSES rated current 3-5A must be installed.

Figure 9 Schematic diagram of instrument signal wiring

An example of wiring for the communication part is shown below:

Correct wiring method: the communication cable shield is connected to the earth.

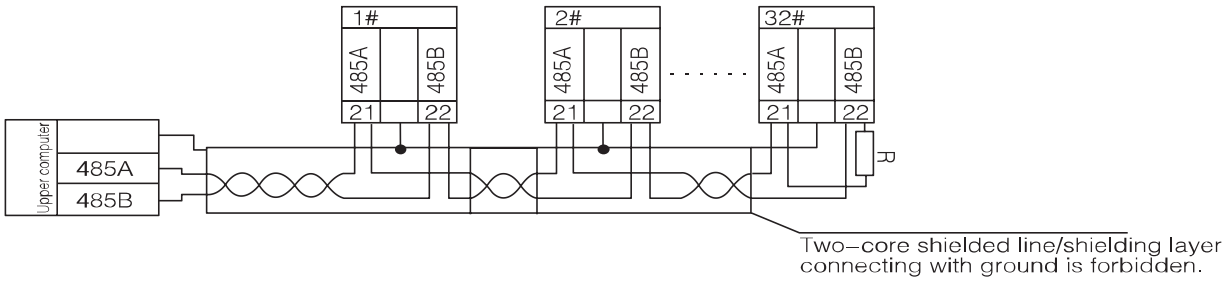

Figure 10 RS485 communication wiring diagram

It is recommended to add a matching resistor between A and B of the end meter, and the resistance range is 120Ω~10 kΩ.

5. Operating inst

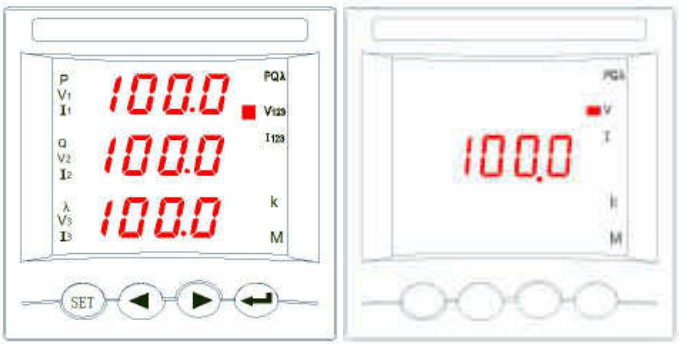

Figure 11 LED front panel

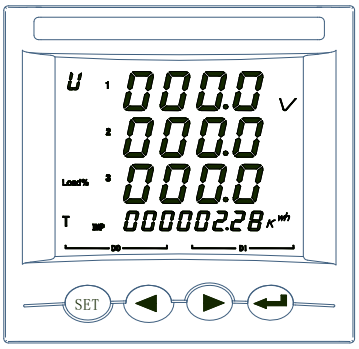

Figure 12 LCD front pane

5.1 Explanation for keypad functionality

Four keys of AMC series intelligent power collection and monitoring device separately indicate SET key, LEFT key, RIGHT key, ENTER key from left to right.

Table 4 key function description

Panel key category	Key Function
SET key (SET)	Under measurement mode, Press This key enter programming mode, meters hint Input password PASS, after Input correct password, set up meters programming; Under programming mode, used for Return to previous menu。
Left key(◀)	Under measurement mode, used for switching Display item; Under programming mode, used for switching same class menu or ones place reduced。
Right key( )	Under measurement mode, used for switching Display item; Under programming mode, used for switching same class menu or ones place increase。
ENTER key(↵)	Under measurement mode, when Displaying Electric energy data, press This key can look over time sharing multi-rate Electric energy(if any); Programming mode, used for menu item selection confirm and parameter revision confirm。
Left key+ENTER key(+)	Programming mode, this key combination is used for the reduction of hundreds of digits.
Right key+ENTER key(+)	Programming mode, this key combination is used to increase the hundred digits.

Note: When using the combination key, you can hold down the Left and Right key and then press the Enter key.

5.2 Display Example

5.2.1 The operation steps of checking the current, voltage, power, electric energy and frequency of amc72 / 96 are shown in FIG. 13 and FIG. 14.

AMC72 / 96 three phase watt hour meter:

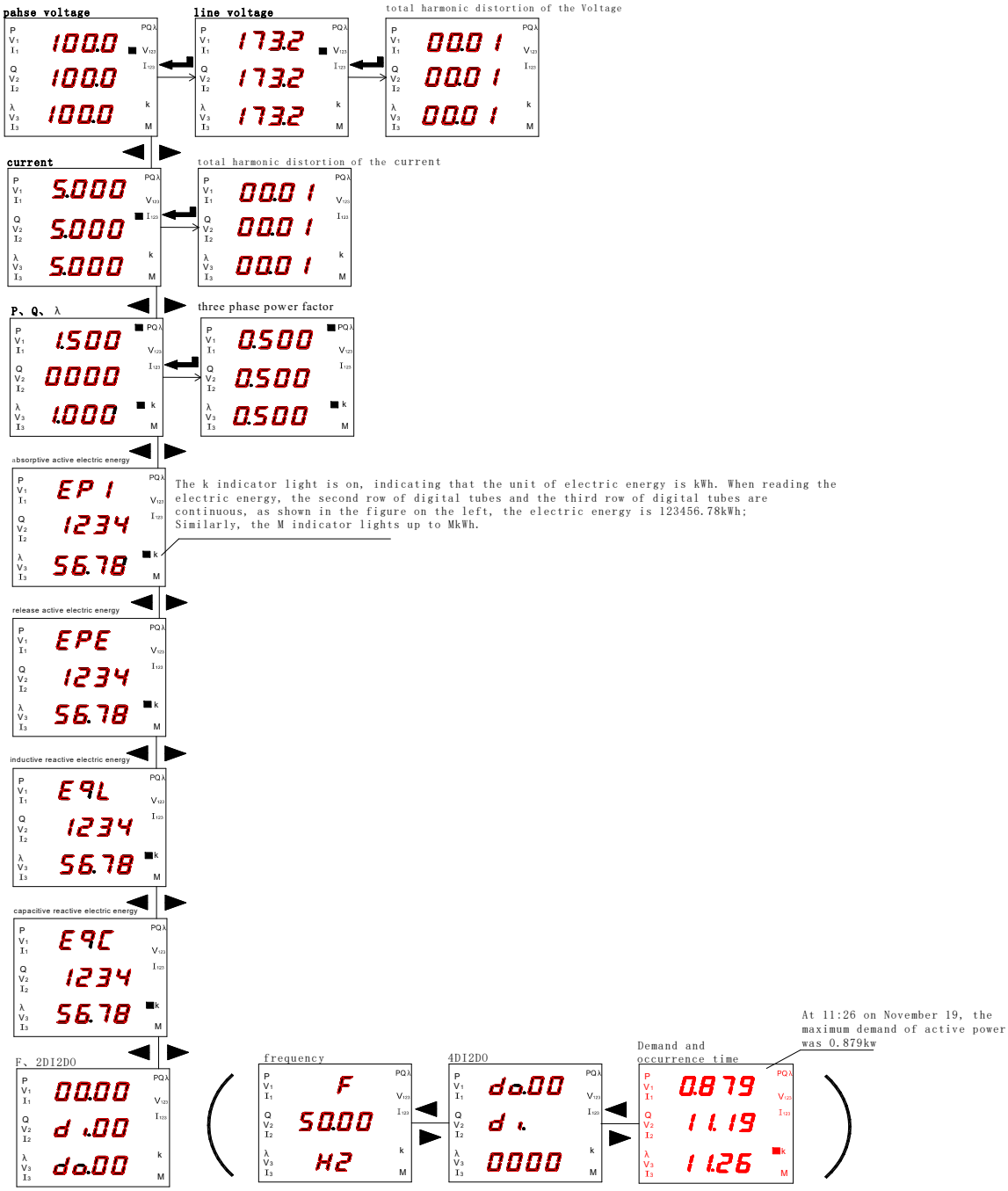

Figure 13

AMC72 single phase watt hour meter:

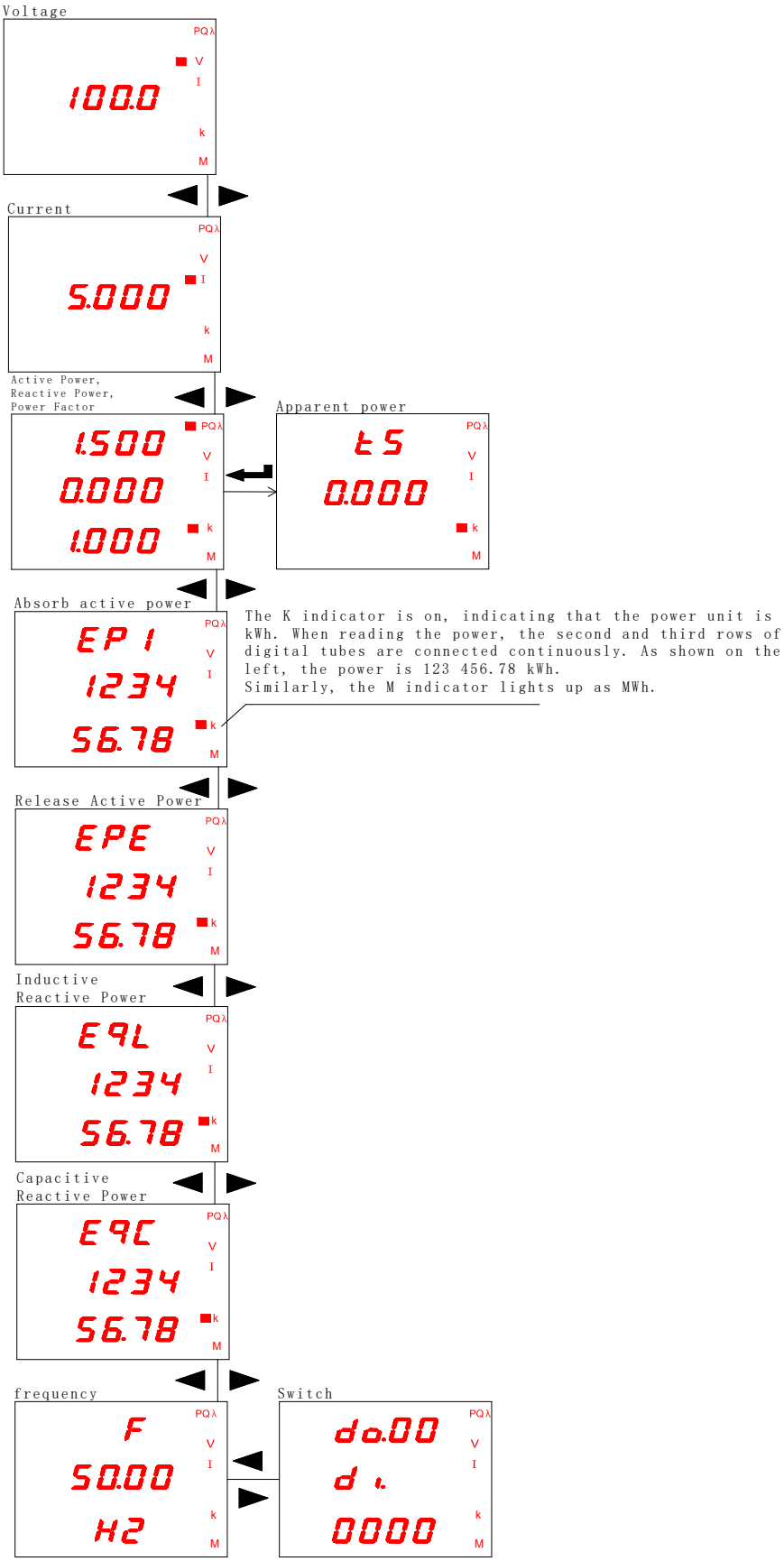

Figure 14

5.2.2 The steps to view the event record of AMC72/96 are shown in Figure 15.

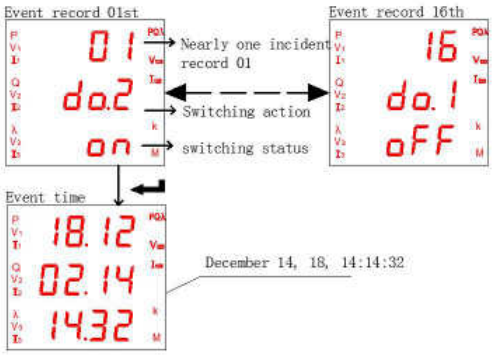

Figure 15

Note: The event record (SOE) can be viewed by pressing the SET key on any interface.

5.2.3 The steps for viewing various types of power parameters of the AMC72L/96L are shown in Figure 16,17.

AMC72L/96L three-phase power meter:

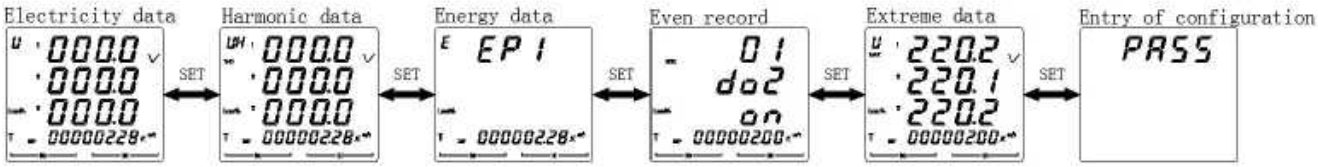

Figure 16

. AMC72L single-phase power:

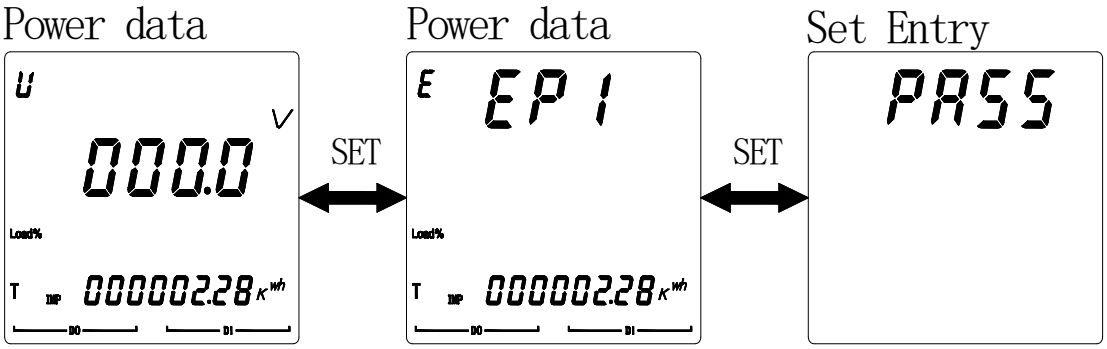

Figure 17

Note: The SET key can be used to switch various types of data,event record (SOE) and extreme value data exist only when SOE function is selected.

5.2.4 View the power parameters of the AMC72L/96L as shown in Figure 18,19.

AMC72L/96L three phase electric energy：

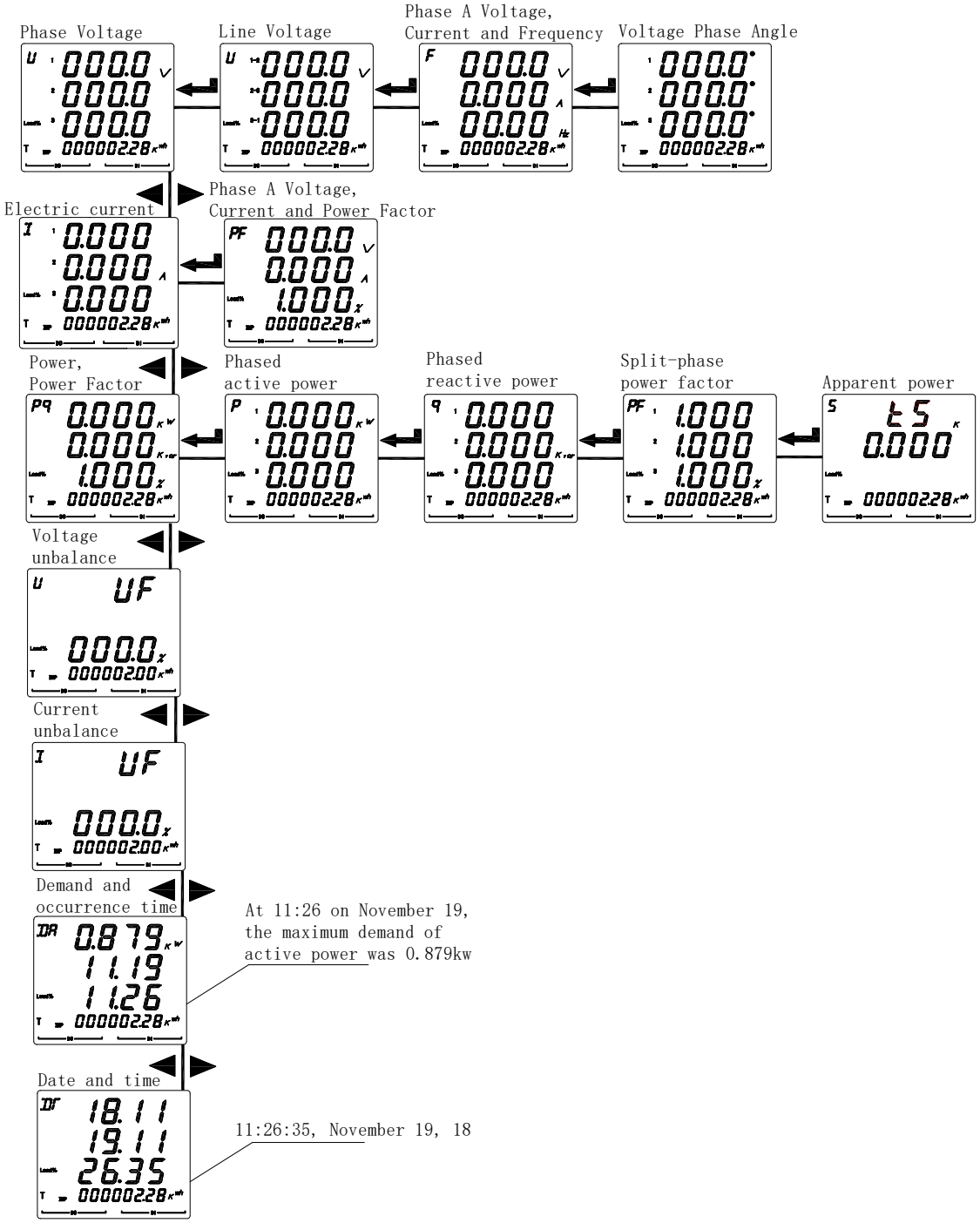

Figure 18

Note: 1. When the meter is equipped with the variable rate (F) function or service outage event (SOE) function, it displays the demand quantity along with the occurrence time, date, and time interface.

AMC72l single phase electric energy:

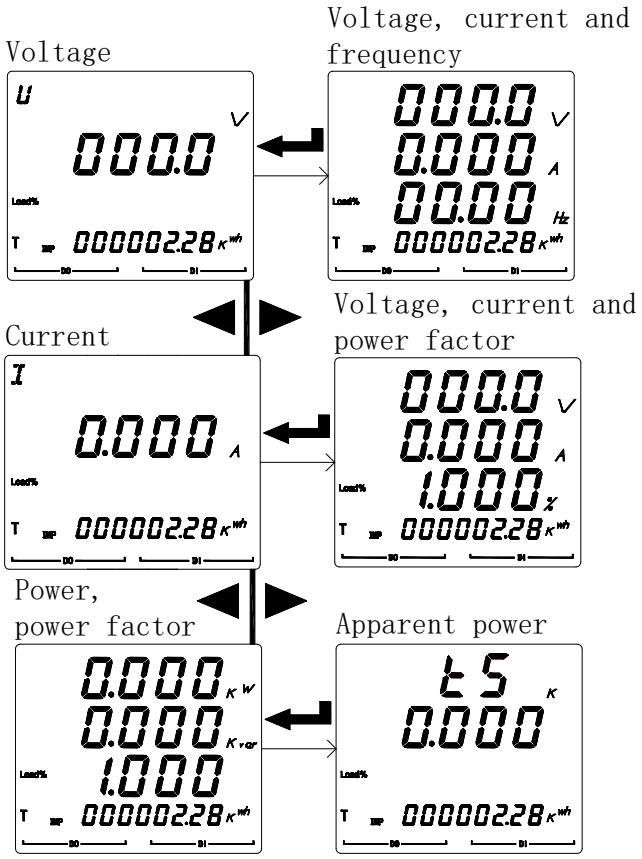

Figure 19

5.2.5 View the harmonic parameters of the AMC72L/96L meter as shown in Figure 20.

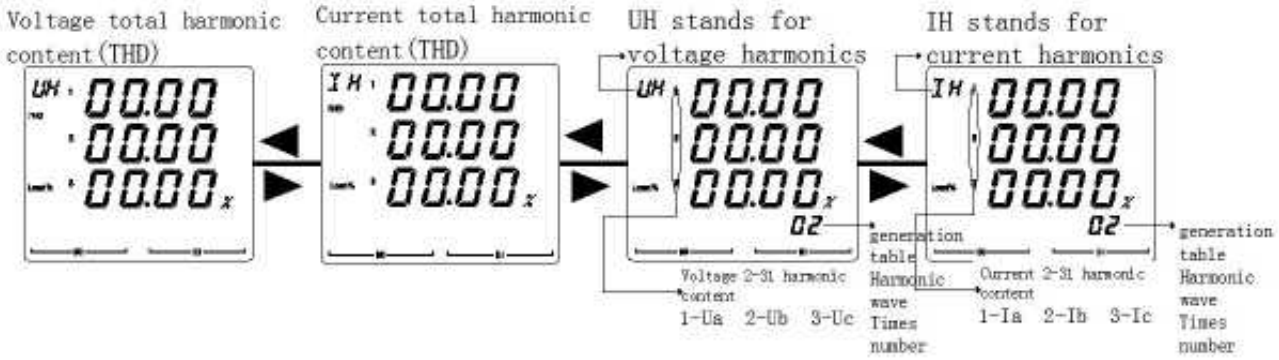

Figure 20.

Note: Press the left and right buttons to switch the harmonic content of 2-31 times.

5.2.6 View the power parameters of the AMC72L/96L as shown in Figure 21.

The following is the interface of the eight-rate version (T-total energy, T1-tip energy, T2-peak energy, T3-level energy, T4-valley energy,T5-deep valley energy,T6-T8 reserved)

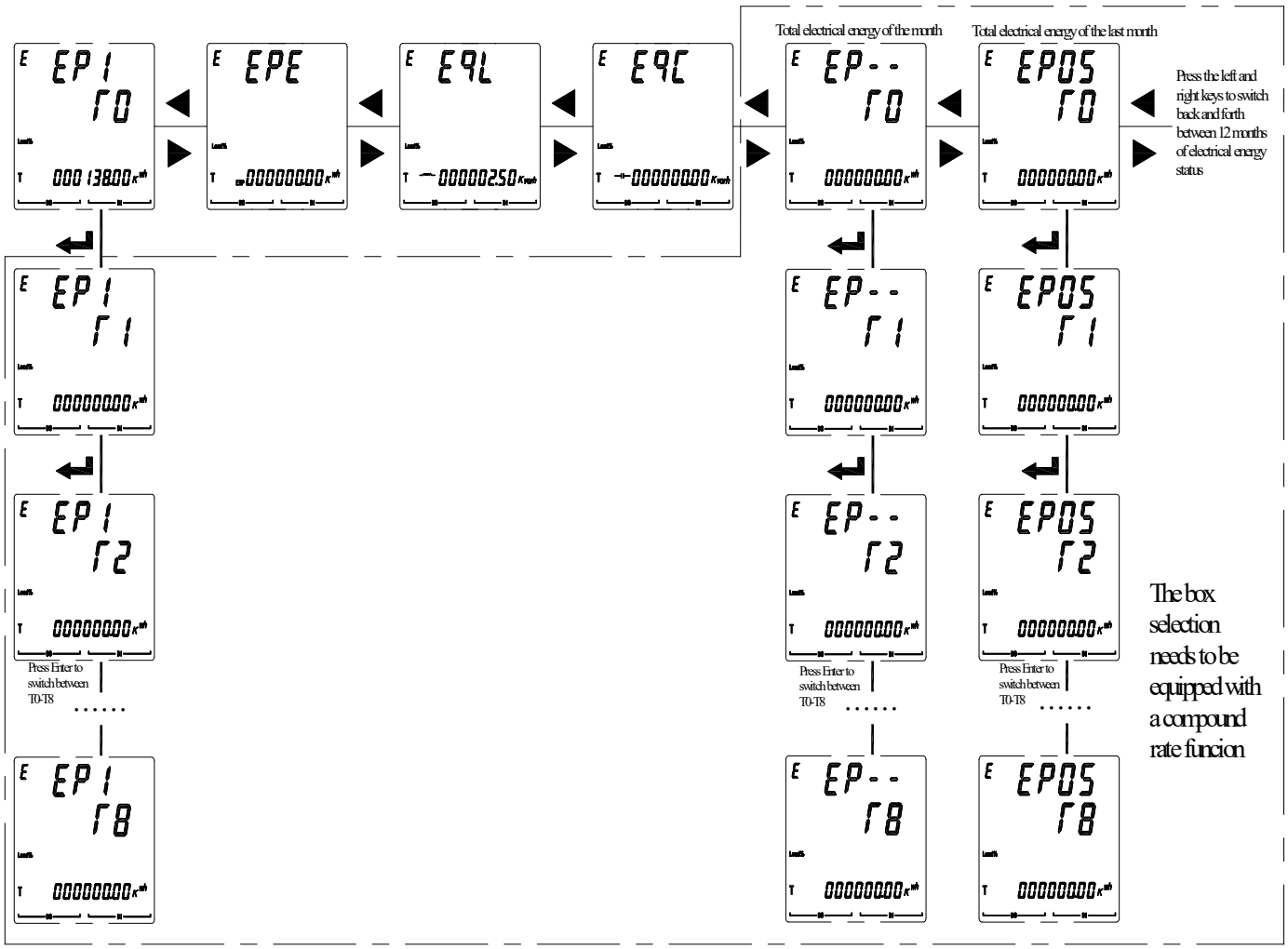

Figure 21

5.2.7 View the AMC72L/96L event record parameters as shown in Figure 22.

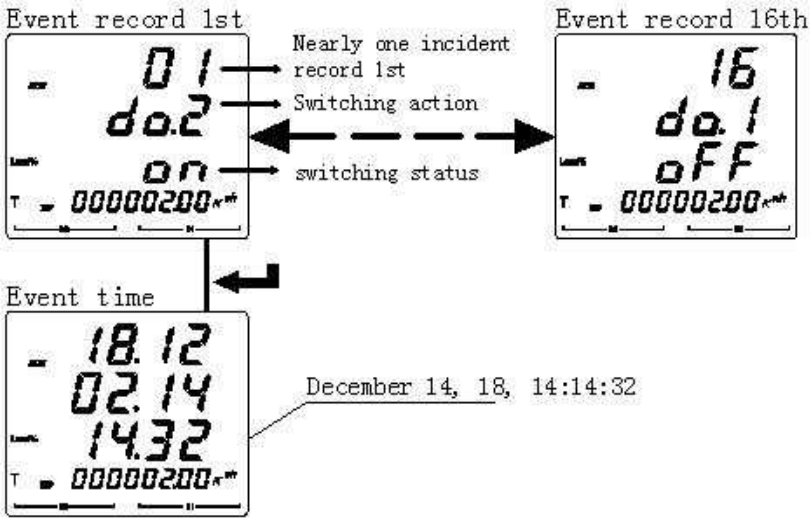

Figure 22

5.2.8 View the extreme value parameters of the AMC72L/96L as shown in Figure 23.

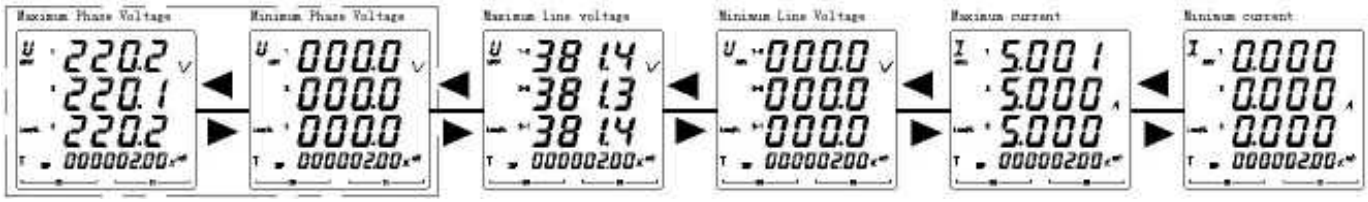

Figure 23

Note: There are no interface voltage maximum value and phase voltage minimum value interface for three-phase three-wire.

5.3 Programming menu

5.3.1 Meter general programming menu

Table 5

First menu	Second menu	Tertiary menu	Description
SYS	disP		Start-up display selection: 0-automatic page turning; other page numbers correspond to the current meter model power parameter interface.
	CodE	0～9999	Password setting (Initial password 0001)
	CLr.E		Press ENTER key Electric energy clear
	CLr.d		Press Enter key, clear demand record
	CLr.n		Press Enter key, clear demand record
	EP.E9	E1/E2	Primary(EI) or secondary(E2) energy display option,The default is E1.
	PLUS	1.6-160.0	Constant of Energy plus(e.g:10.0-10000imp/kWh)
	CF	EP/EQ	Active pulse (EP), reactive pulse (EQ) switching, default active pulse
In	LinE	3P3L、3P4L、3P3i	Connection mode(Three-phase-three-wire、Three-phase-four-wire、Three-phase-three-wire3CT)
	In.U	100V、400V、660V	Input voltage range
	In.I	1A、5A	Input current range
	In.Pt	0～9999	Voltage ratio
	In.Ct	0～9999	Current ratio

	In.U0	0～999.9V	Voltage shielding
bUS	Addr	1～247	Communication address
	bAUd	1200、2400、4800、9600、19200、38400	Communication baud rate
	ñodE	None/2bit/odd/even	Communication data mode
	645 Addr	000000000001～999999999999	645 Protocol Communication Address
tr.1-tr.2	SEL	See 5.4.2 for details.	Analog output item selection
	tYPE	4～20mA Or 0～20mA	Output range
	Ro.Hi	-9999～9999	High change value setting
	Ro.Lo	-9999～9999	Low change value setting
rt-1 ~ rt-14	0-8	00.00～24.00	Reset the rate for 14 time periods： 0-8 corresponds to 8 rates 0-none, 1-tip, 2-peak, 3-level, 4-valley, 5-deep valley, 6-8 reserved 00.00～24.00 is the time setting
do.1-do.2		See 5.4.3for details.	Alarm item selection
	dLY	0000～9999	Alarm delay or remote control delay
	bAnd	0000～9999	Hysteresis setting
	AL.Hi	-9999～9999	High alarm value setting
	AL.Lo	-9999～9999	Low alarm value setting
	In.=0		Whether low alarm is allowed when the signal is 0
dAtE	Year	Month,day	Set current time
TInE	Time	Minutes, seconds	

uEr			Meter version number and number

5.3.2 LCD display instrument backlight control menu

Table 6

First menu	Second menu	Tertiary menu	Description
SYS	b.LCd	0-9999	When set to 0, the backlight is always on. When set to 1-9999, the backlight is off after 1-9999 seconds.

5.3.3 single phase instrument display menu

Table 7

First menu	Second menu	Tertiary menu	Description
In	In.U2	1～9999V	Secondary voltage
	In.I2	1～9999A	Secondary current
	In.U1	0.01～650.00kv	Primary voltage range
	In.I1	1～65000A	Primary current range

5.4 Programming example

The programming example use flow chart to introduce how to change some options of programming menu such as current times, transducer setting etc.

Note: After completing setting or selecting, press ENTER button to confirm, after confirming, pressing SET key until SAVE/YES page appear, now, the ENTER button must be pressed to confirm, otherwise, the setting is invalid.

5.4.1 How to modify the current ratio

For example: the signal is 1000A/5A meter, the ratio setting is shown in Figure 24.

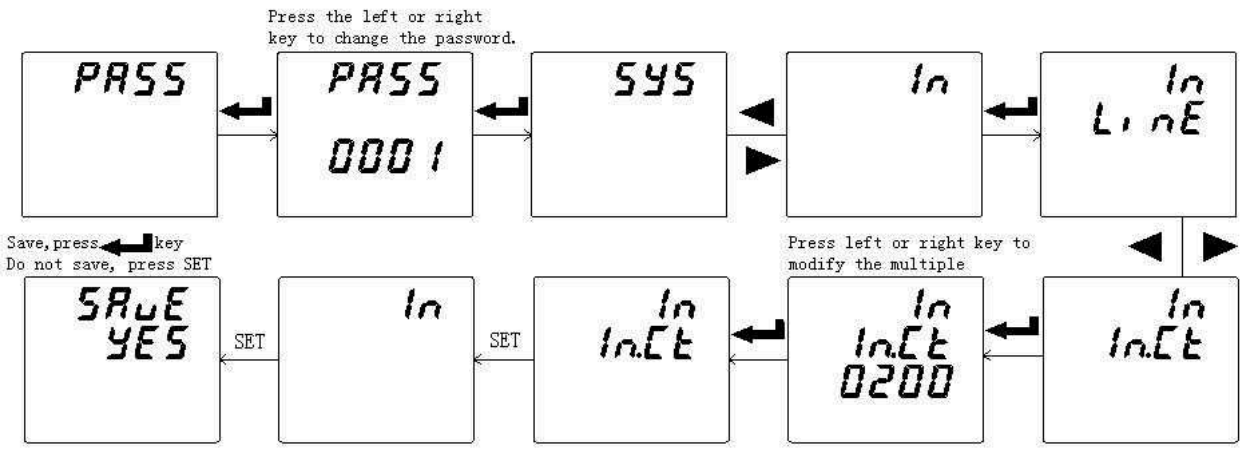

Figure 24

5.4.2 How to modify the analog output settings(Only AMC96 instrument supports analog output function)

For example: set the line voltage Uab to correspond to the first analog 0-20mA output at 19-381V， The settings are shown in Figure 25.

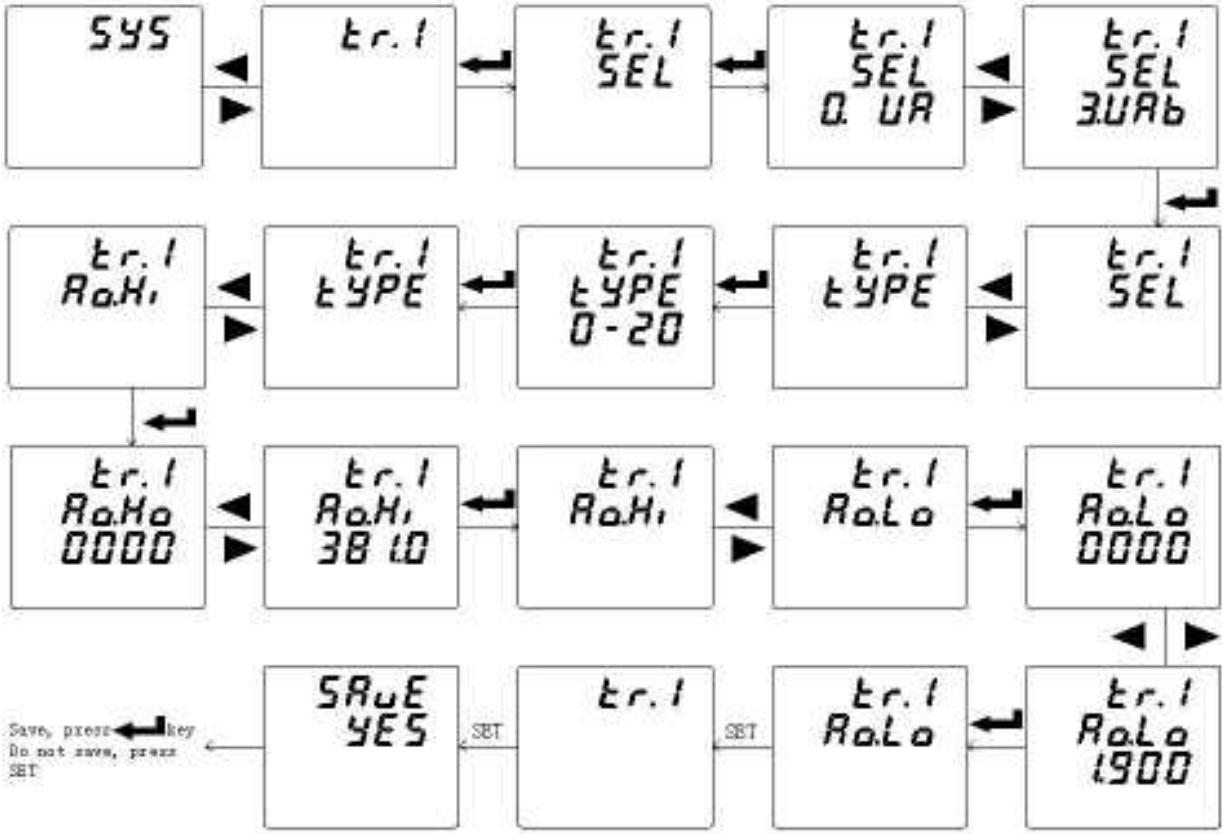

Figure 25

Table 8

<table>
<tr><td>tr.1</td><td>First channel analog output</td></tr>
<tr><td></td><td>Analog output item selection
<table>
<tr><td>00</td><td>01</td><td>02</td><td>03</td><td>04</td><td>05</td><td>06</td><td>07</td></tr>
<tr><td>UA</td><td>UB</td><td>UC</td><td>UB</td><td>UBC</td><td>UCA</td><td>IA</td><td>IB</td></tr>
<tr><td>08</td><td>09</td><td>10</td><td>11</td><td>12</td><td>13</td><td>14</td><td>15</td></tr>
<tr><td>IC</td><td>PA</td><td>PB</td><td>PC</td><td>Psum</td><td>QA</td><td>QB</td><td>QC</td></tr>
<tr><td>16</td><td>17</td><td>18</td><td>19</td><td>20</td><td>21</td><td>22</td><td>23</td></tr>
<tr><td>Qsum</td><td>SA</td><td>SB</td><td>SC</td><td>Ssum</td><td>PFA</td><td>PFB</td><td>PFC</td></tr>
<tr><td>24</td><td>25</td><td colspan="6" rowspan="2"></td></tr>
<tr><td>PF</td><td>F</td></tr>
</table></td></tr>
<tr><td>tYPE</td><td>4～20mA Or 0～20mA</td></tr>
<tr><td>Ao.Hi</td><td>When the analog output is 20mA, the corresponding electrical parameter is taken as the highest four-digit integer (the decimal point is ignored) and the last bit is zero.</td></tr>
<tr><td>Ao.Lo</td><td>Similar to Ao.Hi</td></tr>
</table>

Note: The analog output setting includes the analog output selection, the analog output full scale corresponding value and the analog output zero corresponding value.

The analog output selects different values for different signals, and refers to the analog output item selection. The analog output full scale corresponds to the signal primary side value, that is, the 20 mA output corresponds to the displayed value of the power, and the highest four-digit integer (the decimal point is ignored) is less than 0. If the input is 220V, 100A/5A, three-phase three-wire, the total power is 220V×100A×$\sqrt{3}$=38.10kW, the output type is 4-20mA; if 100% total power, the first analog output is 20mA, 0% total power The first analog output 4mA, the first analog output selection (register address 0005H) is set to 12, the first output fullness corresponding value (register address 0006H) can be set to 38.10; the first output zero corresponding value (Register address 0007H) can be set to 0.

5.4.3 Switching/Relay alarm output setting

For example: when the total active power is lower than 3.3kW or higher than 66kW, the first alarm will act after 10 seconds,and Hysteresis setting is 1kW. When the power is 0, the alarm is allowed. The setting is shown in Figure 26.

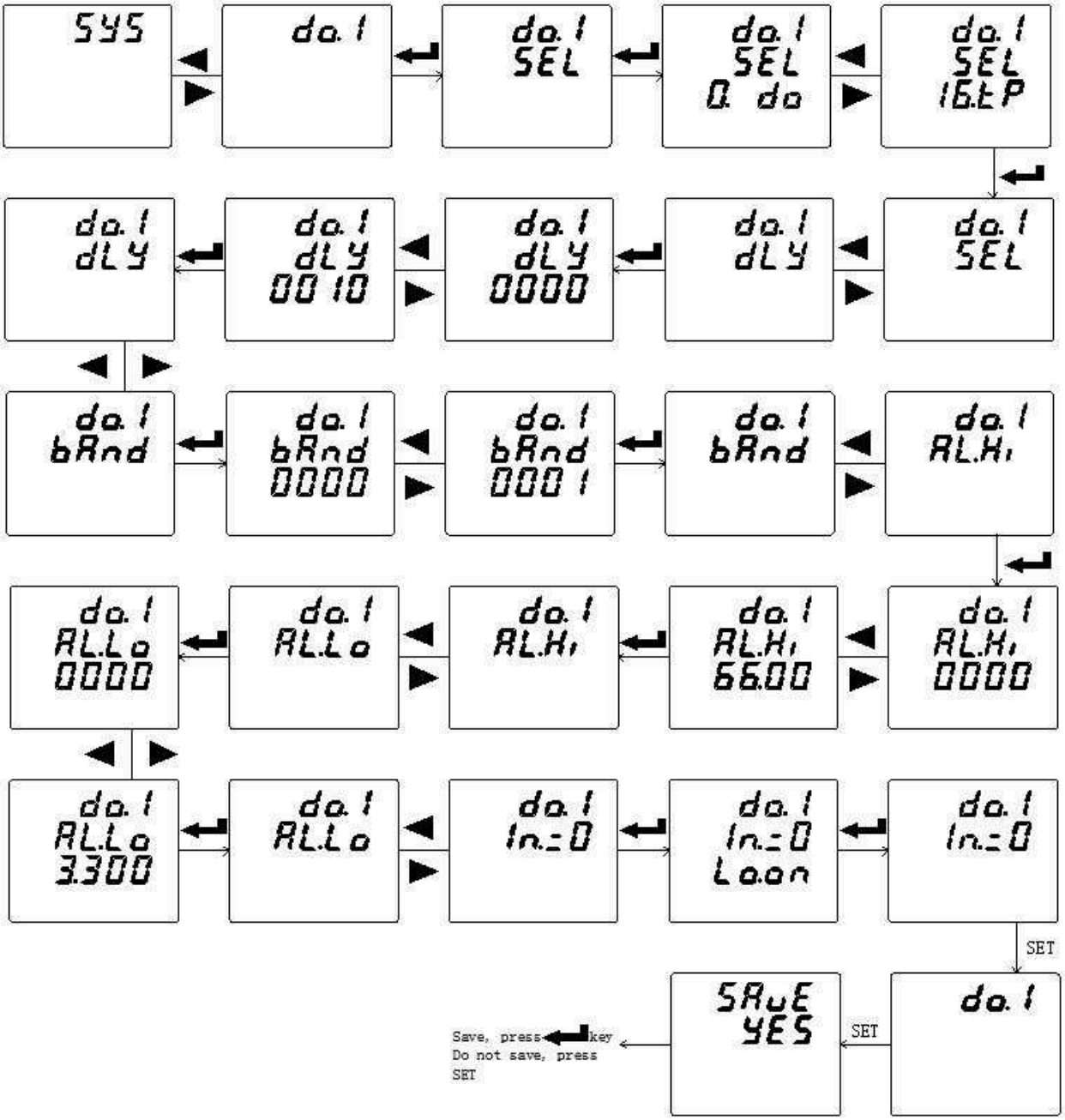

Figure 26

Table 9

<table>
<tr><td>do. 1</td><td>The first switching/relay alarm output</td></tr>
<tr><td></td><td>Alarm item setting
<table>
<tr><td>00</td><td>01</td><td>02</td><td>03</td><td>04</td><td>05</td><td>06</td><td>07</td></tr>
<tr><td>Remote control</td><td>UA</td><td>UB</td><td>UC</td><td>Three-phase phase voltage maximum value</td><td>UAB</td><td>UBC</td><td>UCA</td></tr>
<tr><td colspan="2">08</td><td>09</td><td>10</td><td>11</td><td colspan="2">12</td><td>13</td><td>14</td></tr>
<tr><td colspan="2">hree-phase line voltage maximum value</td><td>IA</td><td>IB</td><td>IC</td><td colspan="2">Three-phase current maximum value</td><td>PA</td><td>PB</td></tr>
<tr><td>15</td><td>16</td><td>17</td><td>18</td><td>19</td><td>20</td><td>21</td><td>22</td><td>23</td></tr>
<tr><td>PC</td><td>Psum</td><td>QA</td><td>QB</td><td>QC</td><td>Qsum</td><td>SA</td><td>SB</td><td>SC</td></tr>
<tr><td>24</td><td>25</td><td>26</td><td>27</td><td>28</td><td>29</td><td colspan="2">30</td><td>31</td></tr>
<tr><td>Ssum</td><td>PFA</td><td>PFB</td><td>PFC</td><td>PF</td><td>F</td><td colspan="2">Voltage imbalance</td><td>Current imbalance</td></tr>
<tr><td colspan="3">32</td><td colspan="3">33</td><td colspan="3">34</td></tr>
<tr><td colspan="3">DI1(Linkage)</td><td colspan="3">DI2(Linkage)</td><td colspan="3">FL（Combined alarm）</td></tr>
<tr><td colspan="6">The corresponding channel "In.=0" needs to be set to "Lo.on"</td><td colspan="3">The second way DO can be set</td></tr>
</table></td></tr>
<tr><td>dLY</td><td>When the alarm item SEL is 00 (remote control), DLY indicates the duration after the switching amount is activated.
When the alarm item SEL is not 00 (alarm), DLY indicates the delay time before the switching action.</td></tr>
<tr><td>bAnd</td><td>Hysteresis setting
Lower limit of alarm threshold + Hysteresis setting = lower limit recovery value
Upper limit of alarm threshold - Hysteresis setting = upper limit recovery value</td></tr>
<tr><td>AL.Hi</td><td>High alarm value setting (do not set the maximum 9999)</td></tr>
<tr><td>AL.Lo</td><td>Low alarm value setting (do not set minimum -9999)</td></tr>
<tr><td>In.=0</td><td>Whether low alarm is allowed when the signal is 0, Lo.on is enabled, Lo.of is forbidden</td></tr>
</table>

Note:

1. Hysteresis setting, high alarm value setting and low alarm value setting correspond to the display value of the battery, and the display contains a decimal point.e.g. input 220V 100A/5A, three phase four wire, 100% P total as 220*100*3=66kW, e.g. 100% power high alarm, "AL.Hi" taken as 66.00; 100% voltage high alarm, "AL.Hi" taken as 220.0; 100% current high alarm, "AL.Hi" taken as 100.0

2.Indication of three phase XX maximum/minimum value: high alarm represents maximum value of three phase; low alarm represents minimum value of three phase

3.Secondary DO to be set as "34.FL" combination alarm function; after setting, level II menu changed as "SEL" (function selection), "dLy" (delay), "H-U" (high voltage), "L-U" (low voltage), "H-F" (high frequency), "L-F" (low frequency), "H-P" (high frequency), "L-P" (low frequency), "H-I" (high current), "L-PF" (low power factor), " H-b.U " (over voltage unbalance, set as -1 phase miss, judgment condition at least one phase>0.5Ue, at least one phase<0.1Ue), " H-b.I " (over current unbalance, set as -1 phase miss, judgment condition at least one phase>0.2Ie, at least one phase<0.01Ie).

4.Unbalance calculation

(Difference between maximum deviation from the mean value and mean value)/mean value *100%,if the mean value of denominator is less than the rated value, the denominator is rated value; voltage rated value Ue; 3 phase 4 wire Ue as the phase voltage, menu setting 400V instrument as 220V*PT, 100V instrument as 57V*PT.Current rated value Ie: 5A instrument as 5A*CT, 1A instrument as 1A*CT.

Unbalance set parameter in percentage, e.g. 20 means 20%.

5.4.4 Rate setting

The user can not set the incoming line through the setting interface,but needs to set the multiple rate of the instrument directly through 485 communication.The instrument can set 4 time zones and 14 time periods.

6 Communication

6.1 General

AMC series instruments adopt a protocol compatible with Modbus-RTU: “9600,8, N, 1”, of which 9600 is the default baud rate and can be programmed to 2400,4800,19200, etc. . 8 Means 8 data bits; N Means No parity bit; 1 means there is one stop bit.

Error Detection: CRC16(CYCLIC REDUNDANCY CHECK)

6.2 Agreement

When the data frame arrives at the terminal device, it enters the addressed device through a simple “Port”, which removes the “Envelope”(data header) of the data frame, reads the data, and, if there is no error, performs the task requested by the data, it then adds its own generated data to the retrieved “Envelope”and returns the data frame to the sender. The returned response Data includes the following: the Terminal Address, the executed command, the requested Data generated by the execution command, and a CRC Check. Any error that occurs will not result in a successful response, or an error indicator frame will be returned.

6.2.1 Data frame format

Address	Function	Data	Validation
8-Bits	8-Bits	N×8-Bits	16-Bits

6.2.2 Address field

The address field is at the beginning of the frame and consists of one byte (8-Bits, 8-bit binary code) , the decimal is 0 ~ 255, only 1 ~ 247 is used in this instrument, other addresses are reserved. These addresses indicate the address of the user-specified terminal device that will receive data from the host to which it is connected. The address of each terminal device on the same bus must be unique, and only the addressed terminal will respond to a query containing that address. When a terminal sends back a response, the slave address data in the response tells the host which terminal is communicating with it.

6.2.3 Function field

The Functional Domain Code tells the addressable terminal what function to perform. The following table lists the function codes used in this series of meters, as well as their meanings, and functions.

Code (hexadecimal)	Meaning	Behavior
03H	Read Hold Register	Gets the current binary value in one or more hold registers
10H	Preset Multiple Register	The specific binary value is loaded into a continuous hold register

6.2.4 Data field

The data field contains the data needed by the terminal to perform a specific function or the data collected by the terminal in response to a query. This data may be a value, a parameter, an address, or a set value.For example, a function field tells a terminal to read a register, and a data field indicates which register to start from and how many pieces of data to read from.

6.2.5 Error Check field

The domain uses the CRC16 Cyclic redundancy check, allowing hosts and terminals to check for transmission errors. Sometimes due to electrical noise and other interference, some changes may occur on the line when a set of data is transmitted from one device to another. Error Checking ensures that the host or slave does not respond to the changed data, this improves the security, reliability and efficiency of the system.

6.3 Message example

As far as possible, the examples in this section are in the following tabular format (hexadecimal data)

Addr	Fun	Data start		Data #of		CRC16	
		Reg Hi	Reg Lo	Reg Hi	Reg Lo	Lo	Hi
01H	03H	00H	00H	00H	06H	C5H	C8H
Address	Function Code	Data starting address		Number of data reads		The Cyclic redundancy check code	

EXAMPLE: Read Password

Query data frame	01 03 00 00 00 01 84 0A
Return data frame	01 03 02 00 01 79 84

EXPLANATION:

Send Message:

01：From the machine address

03：Function Code

00 00：Password Register address (see 6.4)

00 01：Read 1 register

84 0A：CRC

Reply Message:

01：From the machine address

03：Function Code

02：Number of bytes returned

00 01：Current password

79 84：CRC

6.4 Register listing(MODBUS-RTU)

Table 10

Address	Parameter	Read or write	Value range	Data type
0000H	Password saved	R/W	0001-9999	Uint16

0001H high byte	Communication address	R/W	0001-0247	Uint16
0001H low byte	Communication baud rate	R/W	0-3：38400、19200、 9600、4800bps	
0002H	Control character	R/W	8th bit-connection mode (0-3-phase-4-we, 1-3-phase-3-wire) 7th bit-input voltage range (0-400V, 1-100V) second bit-input current range (0-5A, 0-1 A)	Uint16
0003H	PT transformation ratio	R/W	1-9999	Uint16
0004H	CT transformation ratio	R/W	1-9999	Uint16
0005H	First analog output parameter setting Analog output selection	R/W	The low byte is valid, and the corresponding parameter refers to the SEL correspondence in 5.4.2.	Uint16
0006H	First analog output parameter setting Analog output full scale corresponding value	R/W	-9999～9999(Same as analog output setting menu 5.4.2 in Ao.Hi)	Int16
0007H	First analog output parameter setting Analog output zero point corresponding value	R/W	-9999～9999(Same as analog output setting menu 5.4.2 in Ao.Lo)	Int16
0008H-000AH	Second analog output parameter setting	R/W	Same as the first analog output parameter setting	Uint16
000BH-000DH	Third analog output parameter setting	R/W	Same as the first analog output parameter setting	Uint16
000EH-0010H	Fourth analog output parameter setting	R/W	Same as the first analog output parameter setting	Uint16
0011H high byte	Backlight control	R/W	Only applied to LCD Display meters 0= lights	Uint16
001EH～0020H	Date time setting	R/W	Year, Month, Day, Hour, Minute, Second	Uint16
0021H high byte	Automatic meter reading day	R/W	Month, day	Uint16
0021H low byte	Current time rate	R/W	1 sharp, 2 peak, 3 flat, 4 valley	
0022H	Switching input and output status	R/W	See 6.2.1	Uint16
0023H high byte	Decimal point U (DPT)	R	3～7	Uint16
0023H low byte	Decimal point I (DCT)	R	1～5	
0024H high	Decimal point PQ (DPQ)	R	4～10	Uint16

byte				
0024H low byte	Symbol PQ	R	High byte-low byte:Q、Qc、Qb、Qa、P、Pc、Pb、Pa; 0 is positive and 1 is negative	
The following is the primary side power parameter				
0025H	UAN	R	0-9999 (see 6.5.2 for conversion formula)	Uint16
0026H	UBN	R	0-9999 (see 6.5.2 for conversion formula)	Uint16
0027H	UCN	R	0-9999 (see 6.5.2 for conversion formula)	Uint16
0028H	UAB	R	0-9999 (see 6.5.2 for conversion formula)	Uint16
0029H	UBC	R	0-9999 (see 6.5.2 for conversion formula)	Uint16
002AH	UCA	R	0-9999 (see 6.5.2 for conversion formula)	Uint16
002BH	IA	R	0-9999 (see 6.5.2 for conversion formula)	Uint16
002CH	IB	R	0-9999 (see 6.5.2 for conversion formula)	Uint16
002DH	IC	R	0-9999 (see 6.5.2 for conversion formula)	Uint16
002EH	PA	R	0-9999 (see 6.5.2 for conversion formula)	Uint16
002FH	PB	R	0-9999 (see 6.5.2 for conversion formula)	Uint16
0030H	PC	R	0-9999 (see 6.5.2 for conversion formula)	Uint16
0031H	Psum	R	0-9999 (see 6.5.2 for conversion formula)	Uint16
0032H	QA	R	0-9999 (see 6.5.2 for conversion formula)	Uint16
0033H	QB	R	0-9999 (see 6.5.2 for conversion formula)	Uint16
0034H	QC	R	0-9999 (see 6.5.2 for conversion formula)	Uint16
0035H	Qsum	R	0-9999 (see 6.5.2 for conversion formula)	Uint16
0036H	PFA	R	0-1000 (see 6.5.2 for conversion formula)	Uint16
0037H	PFB	R	0-1000 (see 6.5.2 for conversion formula)	Uint16
0038H	PFC	R	0-1000 (see 6.5.2 for conversion formula)	Uint16
0039H	PFsum	R	0-1000 (see 6.5.2 for conversion formula)	Uint16
003AH	SA	R	0-9999 (see 6.5.2 for conversion formula)	Uint16
003BH	SB	R	0-9999 (see 6.5.2 for conversion formula)	Uint16
003CH	SC	R	0-9999 (see 6.5.2 for conversion formula)	Uint16
003DH	Ssum	R	0-9999 (see 6.5.2 for conversion formula)	Uint16
003EH	F	R	4500-6500(see 6.5.2 for conversion formula)	Uint16
The following is the energy address table				
003FH～0040H	Absorptive active electric energy secondary side	R	0-999999999(see 6.5.2 for conversion formula)	Uint32
0041H～0042H	Release active electric energy secondary side	R	0-999999999(see 6.5.2 for conversion formula)	Uint32
0043H～0044H	Inductive reactive electric energy secondary side	R	0-999999999(see 6.5.2 for conversion formula)	Uint32

0045H～0046H	Capacitive reactive electric energy secondary side	R	0-999999999(see 6.5.2 for conversion formula)	Uint32
0047H～0048H	absorptive active electric energy primary side（consumer electricity consumption）	R	unit：Wh	Float
0049H～004AH	Release active electric energy primary side	R	unit：W	Float
004BH～004CH	Inductive reactive electric energy primary side	R	unit：varh	Float
004DH～004EH	Capacitive reactive electric energy primary side	R	unit：varh	Float
004FH	Maximum demand	R	0-9999(unit：W；a primary value)	Int16
0050H～0051H	Maximum demand occurrence time	R	Month、day、hour、min	Uint32
The following is the primary side zero sequence voltage and current address table				
0074H	Zero sequence voltage	R	0-9999(see 6.5.2 for conversion formula)	Uint16
0075H	Zero sequence current	R	0-9999(see 6.5.2 for conversion formula)	Uint16
0076H	Current percentage	R	Unit 0.1%	Uint16
0077H	Voltage current phase sequence state	R	High: Current, low: Voltage 0: Normal 1: Error	Uint16
0078H-0079H	Running time	R	Unit 1min	Uint32
007AH～007DH	Data time	R	Year、mouth、day、hour、min、second、millisecond	Uint16
The following is the voltage phase parameter address table				
008CH	Voltage UA phase angle	R	0-9999（1 decimal place, example 1200 means 120.0）	Uint16
008DH	Voltage UB phase angle	R	0-9999（1 decimal place, example 1200 means 120.0）	Uint16
008EH	Voltage UC phase angle	R	0-9999（1 decimal place, example 1200 means 120.0）	Uint16
The following is the event record address table.				
008FH～0094H	Event record 1st	R	See 6.5.3 event record table 11 for details	Uint16
0095H～009AH	Event record 2nd	R	See 6.5.3 event record table 11 or details	Uint16
009BH～00A0H	Event record 3rd	R	See 6.5.3 event record table 11 for details	Uint16
00A1H～00A6H	Event record 4th	R	See 6.5.3 event record table 11 for details	Uint16

00A7H～00ACH	Event record 5th	R	See 6.5.3 event record table 11 for details	Uint16
00ADH～00B2H	Event record 6th	R	See 6.5.3 event record table 11 for details	Uint16
00B3H～00B8H	Event record 7th	R	See 6.5.3 event record table 11 for details	Uint16
00B9H～00BEH	Event record 8th	R	See 6.5.3 event record table 11 for details	Uint16
00BFH～00C4H	Event record 9th	R	See 6.5.3 event record table 11 for details	Uint16
00C5H～00CAH	Event record 10th	R	See 6.5.3 event record table 11 for details	Uint16
00CBH～00D0H	Event record 11th	R	See 6.5.3 event record table 11 for details	Uint16
00D1H～00D6H	Event record 12th	R	See 6.5.3 event record table 11 for details	Uint16
00D7H～00DCH	Event record 13th	R	See 6.5.3 event record table 11 for details	Uint16
00DDH～00E2H	Event record 14th	R	See 6.5.3 event record table 11 for details	Uint16
00E3H～00E8H	Event record 15th	R	See 6.5.3 event record table 11 for details	Uint16
00E9H～00EEH	Event record 16th	R	See 6.5.3 event record table 11 for details	Uint16
0130H～0136H	Event record 1st	R	See 6.5.3 event record table 12 or details	Uint16
0137H～013DH	Event record 2nd	R	See 6.5.3 event record table 12 for details	Uint16
013EH～0144H	Event record 3rd	R	See 6.5.3 event record table 12 for details	Uint16
0145H～014BH	Event record 4th	R	See 6.5.3 event record table 12 for details	Uint16
014CH～0152H	Event record 5th	R	See 6.5.3 event record table 12 for details	Uint16
0153H～0159H	Event record 6th	R	See 6.5.3 event record table 12 for details	Uint16
015AH～0160H	Event record 7th	R	See 6.5.3 event record table 12 for details	Uint16
0161H～0167H	Event record 8th	R	See 6.5.3 event record table 12 for details	Uint16

0168H～016EH	Event record 9th	R	See 6.5.3 event record table 12 for details	Uint16
016FH～0175H	Event record 10th	R	See 6.5.3 event record table 12 for details	Uint16
0176H～017CH	Event record 11th	R	See 6.5.3 event record table 12 for details	Uint16
017DH～0183H	Event record 12th	R	See 6.5.3 event record table 12 for details	Uint16
0184H～018AH	Event record 13th	R	See 6.5.3 event record table 12 for details	Uint16
018BH～0191H	Event record 14th	R	See 6.5.3 event record table 12 for details	Uint16
0192H～0198H	Event record 15th	R	See 6.5.3 event record table 12 for details	Uint16
0199H～019FH	Event record 16th	R	See 6.5.3 event record table 12 for details	Uint16
The following is the secondary side power parameters				
0100H	UAN	R	0-9999 (1 decimal place, unit V)	Uint16
0101H	UBN	R	0-9999 (1 decimal place, unit V)	Uint16
0102H	UCN	R	0-9999 (1 decimal place, unit V)	Uint16
0103H	UAB	R	0-9999 (1 decimal place, unit V)	Uint16
0104H	UBC	R	0-9999 (1 decimal place, unit V)	Uint16
0105H	UCA	R	0-9999 (1 decimal place, unit V)	Uint16
0106H	IA	R	0-9999 (3 decimal places, unit A)	Uint16
0107H	IB	R	0-9999 (3 decimal places, unit A)	Uint16
0108H	IC	R	0-9999 (3 decimal places, unit A)	Uint16
0109H	PA	R	-9999-9999 (3 decimal places, unit kw)	Int16
010AH	PB	R	-9999-9999 (3 decimal places, unit kw)	Int16
010BH	PC	R	-9999-9999 (3 decimal places, unit kw)	Int16
010CH	Psum	R	-9999-9999 (3 decimal places, unit kw)	Int16
010DH	QA	R	-9999-9999 (3 decimal places, unit kvar)	Int16
010EH	QB	R	-9999-9999 (3 decimal places, unit kvar)	Int16
010FH	QC	R	-9999-9999 (3 decimal places, unit kvar)	Int16
0110H	Qsum	R	-9999-9999 (3 decimal places, unit kvar)	Int16
0111H	PFA	R	-1000 to 1000 (3 decimal places)	Int16
0112H	PFB	R	-1000 to 1000 (3 decimal places)	Int16
0113H	PFC	R	-1000 to 1000 (3 decimal places)	Int16
0114H	PFsum	R	-1000 to 1000 (3 decimal places)	Int16
0115H	SA	R	0-9999 (3 decimal places, unit VA)	Uint16
0116H	SB	R	0-9999 (3 decimal places, unit VA)	Uint16

0117H	SC	R	0-9999 (3 decimal places, unit VA)	Uint16
0118H	Ssum	R	0-9999 (3 decimal places, unit VA)	Uint16
0119H	F	R	4500-6500 (2 decimal places)	Uint16
011AH	Zero sequence voltage	R	0-9999 (1 decimal place, unit V)	Uint16
011BH	Zero sequence current	R	0-9999 (3 decimal places, unit I)	Uint16
DO setting and status read address				
025DH	Communication mode	R/W	0: None 1: 2 Stop 2: Odd 3: Even	Uint16
025EH	Pulse constant setting	R/W	16-1600 100 stands for 10000imp/kWh	Uint16
025FH	DIDO status	R		Uint16
0260H	DO1 alarm selection	R/W	0000-9999 (same as DO setting menu 5.3.3 in SEL)	Uint16
0261H	DO1 alarm delay	R/W	0000-9999 (same as DO setting menu 5.3.3 DLY)	Uint16
0262H	DO1 hysteresis setting	R/W	0000-9999 (same as DO setting menu 5.4.3 bAnd)	Uint16
0263H	DO1 high alarm value	R/W	-9999～9999 (with the DO setting menu 5.3.3 AL.Hi)	Int16
0264H	DO1 low alarm value	R/W	-9999 ～ 9999 (along with DO setting menu 5.3.3 AL.Lo)	Int16
0265H	DO1 low alarm enable	R/W	Enable at 0 (same as DO setting menu 5.4.3 in In.=0)	Uint16
0266H-026BH	DO2 alarm settings	R/W	Same as DO1 alarm setting, high and low voltage value and voltage value in DO2 combination alarm	Uint16
026CH-0271H	DO3 alarm settings	R/W	Same as DO1 alarm setting	Uint16
0272H-0277H	DO4 alarm settings	R/W	Same as DO1 alarm setting	Uint16
0278H	DLT645 address setting	R/W	High four-bit address, hex form	Uint16
0279H	DLT645 address setting	R/W	Medium four-bit address, hex form	Uint16
027AH	DLT645 address setting	R/W	Low four-bit address, hex form	Uint16
027BH	DO2 combination alarm over frequency value	R/W	0000-9999 (same as DO2 setting menu 5.4.3 H-F)	Uint16
027CH	DO2 combination alarm underfrequency value	R/W	0000-9999 (same as DO2 setting menu 5.5.3 L-F)	Uint16
027DH	DO2 combination alarm over power value	R/W	-9999 ～ 9999 (the same as the DO2 setting menu 5.4.3 H-P)	Int16
027EH	DO2 combination alarm underpower value	R/W	-9999 ～ 9999 (L-P in the same DO2 setting menu 5.4.3)	Int16
027FH	DO2 combination alarm over current value	R/W	0000-9999 (the same as the DO2 setting menu 5.4.3 H-I)	Uint16

0280H	DO2 combination alarm underpower factor value	R/W	-1000 to 1000 (L-PF in the same setting as the DO2 setting menu 5.4.3)	Int16
0281H	DO2 combination alarm overvoltage imbalance value	R/W	-1 to 999 (H-b.U in the same setting as the DO2 setting menu 5.4.3)	Int16
0282H	DO2 combination alarm overcurrent imbalance value	R/W	-1 to 999 (H-b.I in the same setting as the DO2 setting menu 5.4.3)	Int16
03E8H	Alarm status of DO2 combined alarm	R	bit0="H- U"（high voltage） bit1="L- U"（low voltage） bit2="H- F"（high frequency） bit3="L- F"（low frequency） bit4="H- P"（high power） bit5="L- P"（low power） bit6="H- I"（high current） bit7="L- PF"（low power factor） bit8="H- b.U"（over voltage unbalance, set as -1 phase miss） bit9="H- b.I"（Current imbalance）	Uint16
03E9H	DO1 current alarm value	R	0000-9999	Uint16
03EAH	DO2 current alarm value	R	0000-9999	Uint16
03EBH	DO3 current alarm value	R	0000-9999	Uint16
03ECH	DO4 current alarm value	R	0000-9999	Uint16
03EDH	DO2 combination alarm current overvoltage value	R	0000-9999	Uint16
03EEH	DO2 combination alarm current undervoltage value	R	0000-9999	Uint16
03EFH	DO2 combination alarm current over frequency value	R	0000-9999	Uint16
03F0H	DO2 combination alarm current underfrequency value	R	0000-9999	Uint16
03F1H	DO2 combination alarm current overpower value	R	0000-9999	Uint16
03F2H	DO2 combination alarm current underpower value	R	0000-9999	Uint16
03F3H	DO2 combination alarm current overcurrent value	R	0000-9999	Uint16
03F4H	DO2 combination alarm underpower factor value	R	0000-9999	Uint16

03F5H	DO2 combination alarm overvoltage imbalance value	R	0000-9999	Uint16
03F6H	DO2 combination alarm overcurrent imbalance value	R	0000-9999	Uint16
The following is an address table with H function				
0400H	A Phase voltage total harmonic distortion rate	R	0-9999（2 decimal places, example 200 means 2%）	Uint16
0401H	B Phase voltage total harmonic distortion rate	R	0-9999（2 decimal places, example 200 means 2%）	Uint16
0402H	C Phase voltage total harmonic distortion rate	R	0-9999（2 decimal places, example 200 means 2%）	Uint16
0403H	A Phase current total harmonic distortion rate	R	0-9999（2 decimal places, example 200 means 2%）	Uint16
0404H	B Phase current total harmonic distortion rate	R	0-9999（2 decimal places, example 200 means 2%）	Uint16
0405H	C Phase current total harmonic distortion rate	R	0-9999（2 decimal places, example 200 means 2%）	Uint16
0406H	A Phase voltage harmonic value	R	0-9999 (secondary side value, decimal point 1 bit, unit V)	Uint16
0407H	B Phase voltage harmonic value	R	0-9999 (secondary side value, decimal point 1 bit, unit V)	Uint16
0408H	C Phase voltage harmonic value	R	0-9999 (secondary side value, decimal point 1 bit, unit V)	Uint16
0409H	A Phase current harmonic value	R	0-9999 (secondary side value, decimal point 3 bits, unit A)	Uint16
040AH	B Phase current harmonic value	R	0-9999 (secondary side value, decimal point 3 bits, unit A)	Uint16
040BH	C Phase current harmonic value	R	0-9999 (secondary side value, decimal point 3 bits, unit A)	Uint16
040CH-0429H	A Phase voltage 2-31 harmonic distortion rate	R	0-9999（2 decimal places, example 200 means 2%）	Uint16
042AH-0447H	B Phase voltage 2-31 harmonic distortion rate	R	0-9999（2 decimal places, example 200 means 2%）	Uint16
0448H-0465H	C Phase voltage 2-31 harmonic distortion rate	R	0-9999（2 decimal places, example 200 means 2%）	Uint16
0466H-0483H	A Phase current 2-31 harmonic distortion rate	R	0-9999（2 decimal places, example 200 means 2%）	Uint16
0484H-04A1H	B Phase current 2-31 harmonic distortion rate	R	0-9999（2 decimal places, example 200 means 2%）	Uint16

04A2H-04BFH	C Phase current 2-31 harmonic distortion rate	R	0-9999（2 decimal places, example 200 means 2%）	Uint16
04C0H-04DDH	A Phase voltage 2-31 harmonic value	R	0-9999 (secondary side value, decimal point 1 bit, unit V)	Uint16
04DEH-04FBH	B Phase voltage 2-31 harmonic value	R	0-9999 (secondary side value, decimal point 1 bit, unit V)	Uint16
04FCH-0519H	C Phase voltage 2-31 harmonic value	R	0-9999 (secondary side value, decimal point 1 bit, unit V)	Uint16
051AH-0537H	A Phase current 2-31 harmonic value	R	0-9999 (secondary side value, decimal point 3 bits, unit A)	Uint16
0538H-0555H	B Phase current 2-31 harmonic value	R	0-9999 (secondary side value, decimal point 3 bits, unit A)	Uint16
0556H-0573H	C Phase current 2-31 harmonic value	R	0-9999 (secondary side value, decimal point 3 bits, unit A)	Uint16
The following is the extreme value address table				
0600H	A Phase voltage maximum	R	0-9999 (secondary side value)	Uint16
0601H	A phase voltage maximum value occurs year, month	R	High bit:year, low bit:month	Uint16
0602H	A phase voltage maximum value occurs day, hour	R	High bit:day, low bit:hour	Uint16
0603H	A maximum value of the phase voltage occurs minutes, seconds	R	High bit:minute, low bit:second	Uint16
0604H-0607H	B phase voltage maximum value and occurrence time	R	(The same as the A phase voltage extreme value)	Uint16
0608H-060BH	C phase voltage maximum value and occurrence time	R	(The same as the A phase voltage extreme value)	Uint16
060CH-060FH	A line voltage maximum value and occurrence time	R	(The same as the A phase voltage extreme value)	Uint16
0610H-0613H	B line voltage maximum value and occurrence time	R	(The same as the A phase voltage extreme value)	Uint16
0614H-0617H	C line voltage maximum value and occurrence time	R	(The same as the A phase voltage extreme value)	Uint16
0618H-061BH	A phase current maximum value and occurrence time	R	(The same as the A phase voltage extreme value)	Uint16
061CH-061FH	B phase current maximum value and occurrence time	R	(The same as the A phase voltage extreme value)	Uint16
0620H-0623H	C phase current maximum value and occurrence time	R	(The same as the A phase voltage extreme value)	Uint16

0680H-0683H	A phase voltage minimum value and occurrence time	R	(The same as the A phase voltage extreme value)	Uint16
0684H-0687H	B phase voltage minimum value and occurrence time	R	(The same as the A phase voltage extreme value)	Uint16
0688H-068BH	C phase voltage minimum value and occurrence time	R	(The same as the A phase voltage extreme value)	Uint16
068CH-068FH	A line voltage minimum value and occurrence time	R	(The same as the A phase voltage extreme value)	Uint16
0690H-0693H	B line voltage minimum value and occurrence time	R	(The same as the A phase voltage extreme value)	Uint16
0694H-0697H	C line voltage minimum value and occurrence time	R	(The same as the A phase voltage extreme value)	Uint16
0698H-069BH	A phase current minimum value and occurrence time	R	(The same as the A phase voltage extreme value)	Uint16
069CH-069FH	B phase current minimum value and occurrence time	R	(The same as the A phase voltage extreme value)	Uint16
06A0H-06A3H	C phase current minimum value and occurrence time	R	(The same as the A phase voltage extreme value)	Uint16
0700H	**Voltage imbalance**	R	0-9999 (1 decimal place, example 20 means 2%)	Uint16
0701H	Current imbalance	R	0-9999 (1 decimal place, example 20 means 2%)	Uint16
0703H-0709H	Serial number	R/W	Fourteen ASCII codes	Ascii

Float address table (function codes 03H and 04H) ， **Optional compound rate function is readable**:

Offset address	name	explain	R/W	Word length	type	remarks
0x2000	UA	A-phase voltage	R	2	float	V
0x2002	UB	B-phase voltage	R	2	float	V
0x2004	UC	C-phase voltage	R	2	float	V
0x2006	UAB	AB line voltage	R	2	float	V
0x2008	UBC	BC line voltage	R	2	float	V
0x200a	UCA	CA line voltage	R	2	float	V
0x200c	IA	A-phase current	R	2	float	A
0x200e	IB	B-phase current	R	2	float	A
0x2010	IC	C-phase current	R	2	float	A
0x2012	IN	N-wire current	R	2	float	A
0x2014	PA	Phase A active power	R	2	float	kW
0x2016	PB	Phase B active power	R	2	float	kW
0x2018	PC	Phase C active power	R	2	float	kW
0x201a	PT	Total active power	R	2	float	kW
0x201c	QA	A-phase reactive power	R	2	float	Kvar
0x201e	QB	B-phase reactive power	R	2	float	Kvar
0x2020	QC	C-phase reactive power	R	2	float	Kvar
0x2022	QT	Total reactive power	R	2	float	Kvar
0x2024	SA	A-phase apparent power	R	2	float	KVA
0x2026	SB	B-phase apparent power	R	2	float	KVA
0x2028	SC	C-phase apparent power	R	2	float	KVA
0x202a	ST	Total apparent power	R	2	float	KVA
0x202c	PFA	A-phase power factor	R	2	float	
0x202e	PFB	B-phase power factor	R	2	float	
0x2030	PFC	C-phase power factor	R	2	float	
0x2032	PF	Total power factor	R	2	float	
0x2034	F	Frequency	R	2	float	Hz

0x2036	UNAvg	Average phase voltage	R	2	float	V

0x2038	ULAvg	Average line voltage	R	2	float	V
0x203a	IAvg	Average Current	R	2	float	A

The following part is the supplementary address table and the complex rate parameter address table with the complex rate electric energy monitoring, all electric energy is the secondary side electric energy.

Eight rate address table (Tip,Peak,level,Valley,Deep valley) :

Address	Parameters	Read-write attribute	Numerical range	Data type
0xE200	Secondary Side of total active power	R/W	0-999999999	Uint32
0xE202	Secondary side of positive active energy	R/W	0-999999999	Uint32
0xE204	Secondary value of reverse active energy	R/W	0-999999999	Uint32
0xE206	Secondary value of total reactive energy	R/W	0-999999999	Uint32
0xE208	Secondary value of forward reactive energy	R/W	0-999999999	Uint32
0xE20a	Secondary value of reverse reactive energy	R/W	0-999999999	Uint32
0xE20c	Secondary value of apparent electrical energy	R/W	0-999999999	Uint32
0xE20E	Secondary Side of total tip active power	R/W	0-999999999	Uint32
0xE210	Secondary side of total peak active power	R/W	0-999999999	Uint32
0xE212	Secondary Side of total level active power	R/W	0-999999999	Uint32
0xE214	Secondary Side of total valley active power	R/W	0-999999999	Uint32
0xE216	Secondary Side of total deep valley active power	R/W	0-999999999	Uint32
0xE218	Reserve	R/W	0-999999999	Uint32
0xE21A	Reserve	R/W	0-999999999	Uint32
0xE21C	Reserve	R/W	0-999999999	Uint32

0xE21E	Secondary side of positive tip active energy	R/W	0-999999999	Uint32
0xE220	Secondary side of positive peak active energy	R/W	0-999999999	Uint32
0xE222	Secondary side of positive level active energy	R/W	0-999999999	Uint32
0xE224	Secondary side of positive valley active energy	R/W	0-999999999	Uint32
0xE226	Secondary side of positive deep valley active energy	R/W	0-999999999	Uint32
0xE228	Reserve	R/W	0-999999999	Uint32
0xE22A	Reserve	R/W	0-999999999	Uint32
0xE22C	Reserve	R/W	0-999999999	Uint32
Eight rate version (peak, flat, deep valley, remaining temporarily reserved) primary side energy				
0xE300	primary Side of total active power	R/W	2	float
0xE302	primary side of positive active energy	R/W	2	float
0xE304	primary side of reverse active energy	R/W	2	float
0xE306	Primary value of total reactive energy	R/W	2	float
0xE308	Primary value of forward reactive energy	R/W	2	float
0xE30a	Primary value of reverse reactive energy	R/W	2	float
0xE30c	Primary value of apparent electrical energy	R/W	2	float
0xE30e	Primary Side of total tip active power	R/W	2	float
0xE310	Primary side of total peak active power	R/W	2	float

0xE312	Primary Side of total level active power	R/W	2	float
0xE314	Primary Side of total valley active power	R/W	2	float
0xE316	Primary Side of total deep valley active power	R/W	2	float
0xE318	Reserve	R/W	2	float
0xE31a	Reserve	R/W	2	float
0xE31c	Reserve	R/W	2	float
0xE31e	Primary side of positive tip active energy	R/W	2	float
0xE320	Primary side of positive peak active energy	R/W	2	float
0xE322	Primary side of positive level active energy	R/W	2	float
0xE324	Primary side of positive valley active energy	R/W	2	float
0xE326	Primary side of positive deep valley active energy	R/W	2	float
0xE328	Reserve	R/W	2	float
0xE32a	Reserve	R/W	2	float
0xE32c	Reserve	R/W	2	float

January: 50D8 February: 50EA March: 50FC April: 510E May: 5120 June: 5132 July: 5144 August: 5156 September: 5168 October: 517A November: 518C December: 519E	Secondary side of total active energy from January to December	R/W	0-999999999	Uint32
January: 50DA February: 50EC March: 50FE April: 5110 May: 5122 June: 5134 July: 5146 August: 5158 September: 516A October: 517C November: 518E December: 51A0	Secondary side of tip active energy from January to December	R/W	0-999999999	Uint32
January: 50DC February: 50EE March: 5100 April: 5112 May: 5124 June: 5136 July: 5148 August: 515A September: 516C October: 517E November: 5190 December: 51A2	Secondary side of peak active energy from January to December	R/W	0-999999999	Uint32

January: 50DE February: 50F0 March: 5102 April: 5114 May: 5126 June: 5138 July: 514A August: 515C September: 516E October: 5180 November: 5192 December: 51A4	Secondary side of level active energy from January to December	R/W	0-999999999	Uint32
January: 50E0 February: 50F2 March: 5104 April: 5116 May: 5128 June: 513A July: 514C August: 515E September: 5170 October: 5182 November: 5194 December: 51A6	Secondary side of valley active energy from January to December	R/W	0-999999999	Uint32
January: 50E2 February: 50F4 March: 5106 April: 5118 May: 512A June: 513C July: 514E August: 5160 September: 5172 October: 5184 November: 5196 December: 51A8	Secondary side of deep valley active energy from January to December	R/W	0-999999999	Uint32

January：50E4 February：50F6 March：5108 April：511A May：512C June：513E July：5150 August：5162 September：5174 October：5186 November：5198 December：51AA	Reserve	R/W	0-999999999	Uint32
January：50E6 February：50F8 March：510A April：511C May：512E June：5140 July：5152 August：5164 September：5176 October：5188 November：519A December：51AC	Reserve	R/W	0-999999999	Uint32
January：50E8 February：50FA March：510C April：511E May：5130 June：5142 July：5154 August：5166 September：5178 October：518A November：519C December：51AE	Reserve	R/W	0-999999999	Uint32

Address	Name	Explain	R/W	Word length	Types	Notes
0xE000	ZoneNum1,ZoneMonth1,ZoneDay1	First Time Zone time table number, first time zone	R/W	21	Uint16	Time Slot number: Time Slot 1,

	ZoneNum2,ZoneMonth 2,ZoneDay2 ZoneNum3,ZoneMonth 3,ZoneDay3 ZoneNum4,ZoneMonth 4,ZoneDay4 ZoneNum5,ZoneMonth 5,ZoneDay5 ZoneNum6,ZoneMonth 6,ZoneDay6 ZoneNum7,ZoneMonth 7,ZoneDay7 ZoneNum8,ZoneMonth 8,ZoneDay8	beginning month, first time zone day. Second time zone time table number, second time zone beginning month, second time zone day. 3rd Time Zone time table number, 3rd time zone start month, 3rd Time Zone Day. The 4th time zone time table number, the 4th time zone beginning month, the 4th Time Zone Day. 5th Time Zone time table number, 5th time zone start month, 5th time zone day. The sixth time zone time table number, the sixth time zone beginning month, the sixth time zone day. The seventh time zone time table number, the seventh time zone beginning month, the seventh time zone day. The eighth time zone time table number, the eighth time zone beginning month, the eighth time zone day.				Time Slot 2, Time Slot 3, Time Slot 4, Time Slot 5, Time Slot 6, Time Slot 7, Time Slot 8 Beginning Month: 1-12, beginning day: 1-31
0xE02A	Table1 Rt1~Rt14	The first set of time table, each time period occupied three bytes, respectively for the rate, at the beginning, starting points	R/W	21	Uint16	RATES: 0 1 Rate 1, 2 Rate 2 3 rates 3, 4 rates 4 5 rates 5, 6 rates 6 7 rates 7, 8 rates 8beginning: 0-23 points: 1-59
0xE03F	Table2 Rt1~Rt14	The second set of time table, each time period occupied three bytes, respectively for the rate, at the beginning, the beginning of points	R/W	21	Uint16	Same as the first time table

0xE054	Table3 Rt1~Rt14	The third set of time table, each time period occupied three bytes, respectively for the rate, at the beginning, the beginning of points	R/W	21	Uint16	Same as the first time table
0xE069	Table4 Rt1~Rt14	The fourth set of time table, each time period occupied three bytes, respectively for the rate, at the beginning, the beginning of points	R/W	21	Uint16	Same as the first time table
0xE07E	Table5 Rt1~Rt14	The fifth set of time table, each time period occupied three bytes, respectively for the rate, at the beginning, starting points	R/W	21	Uint16	Same as the first time table
0xE093	Table6 Rt1~Rt14	The sixth set of time table, each time period occupied three bytes, respectively for the rate, at the beginning, starting points	R/W	21	Uint16	Same as the first time table
0xE0A8	Table7 Rt1~Rt14	The seventh set of time table, each time period occupied three bytes, respectively for the rate, at the beginning, starting points	R/W	21	Uint16	Same as the first time table
0xE0BD	Table8 Rt1~Rt14	The eighth set of time table, each time period occupied three bytes, respectively for the rate, at the beginning, starting points	R/W	21	Uint16	Same as the first time table

Note: The time after setting the rate time must be larger than the time before, otherwise there will be an error, setting example as follows.

Time zone setting

Num.	Time table number	Parameters	Description
1	1	01-01	Time Zone 1 from January 1 to January 31, using time slot table 1
2	2	02-01	Time Zone 2 from February 1 to February 28, using the time slot table 2
3	3	03-01	Time Zone 3 from March 1 to May 31, using time slot table 3
4	4	06-01	Time Zone 4 runs from June 1 to July 31, using time slot table 4

5	1	08-01	Time Zone 5 from August 1 to August 31, using the time slot table 1
6	2	09-01	Time Zone 6 from 1 September to 30 September, using time slot table 2
7	3	10-01	Time Zone 7 from 1 October to 31 October, using time slot table 3
8	4	11-01	Time Zone 8 is from November 1 to December 31, using time slot table 4

Timesheet setting

Num.	Rate	Time	Description
1	4	00：00	In the 00:00 to 02:00 period, the rate is valley
2	3	02：00	In the 02:00 to 03:00 period, the rate is flat
3	2	03：00	In the 03:00 to 04:00 period, the rate is Peaks
4	1	04：00	In the 04:00 to 06:00 period, the rate is Pointy
5	2	06：00	In the 06:00 to 08:00 period, the rate is Peaks
6	1	08：00	In the 08:00 to 10:00 period, the rate is Pointy
7	2	10：00	In the 10:00 to 12:00 period, the rate is Peaks
8	3	12：00	In the 12:00 to 14:00 period, the rates are flat
9	4	14：00	In the 14:00 to 16:00 period, the rate is valley
10	3	16：00	In the 16:00 to 18:00 period, the rates are flat
11	2	18：00	In the 18:00 to 20:00 period, the rate is Peaks
12	1	20：00	In the 20:00 to 22:00 period, the rate is Pointy
13	2	22：00	In the 22:00 to 23:00 period, the rate is Peaks
14	1	23：00	In the 23:00 to 00:00 period, the rate is Pointy

Note：4 rates and 8 time zones can be set for instrument multiple rates，and 14 time periods can be set every day.

6.5 Communication application

The AMC series intelligent power collection and monitoring device has unified planning of the communication address table during design. The user can conveniently realize the functions of telemetry, remote signaling and remote control according to the following description.

6.5.1 Switching input and output

The switching input of AMC series intelligent power collection and monitoring device adopts dry contact switch signal input mode. The instrument is equipped with working power supply, no external power supply is required. When the external contact is closed or disconnected, the meter displays the switch status locally, and the remote transmission function can be realized through the communication port of the meter, that is, the “remote message” function.

The switching output of AMC series intelligent power collection and monitoring device is relay output, which can be remotely controlled by the host computer (the remote control has two modes: 1, level trigger; 2. pulse trigger) to realize the "remote control" function, or according to customer requirements. Implement the corresponding alarm function (such as over current, under voltage).

The communication address of the AMC series intelligent power collection monitoring device and the digital switching input and switching output is 0022H, and its correspondence with the digital input and output is as follows:

	16	15	14	13	12	11	10	9	8～1
0022H			DO 2	DO 1	DI 4	DI 3	DI 2	DI 1	Reserved

6.5.2 Power parameters and electrical energy

The series of measured values are read by the command No. 03 of the Modbus-RTU communication protocol. The correspondence between the communication value and the actual value is as follows: (Agreed Val_t is the communication read value, Val_s is the actual value).

1. Phase voltage UA, UB, UC, line voltage UAB, UBC, UCA, zero sequence voltage:

Val_s=Val_t×10ˆ（DPT-4），Unit volt V, DPT is read from the high byte of 0023H .

2. Current IA, IB, IC, zero sequence current:

Val_s=Val_t×10ˆ（DCT-4），Unit Ampere A, DCT is read from the low byte of 0023H.

3.Power PA, PB, PC, Psum, QA, QB, QC, Qsum:

Val_s=Val_t×10ˆ（DPQ-4），Active power unit watt W, reactive power unit var, DPQ read from 0024H high byte, active power and reactive power symbols from 0024H low byte (from high to low, Q, Qc, Qb, Qa, P, Pc, Pb, Pa) read.

4.Power factor values PFA, PFB, PFC, PFsum:

Val_s=Val_t/1000，No unit

5.Frequency:

Val_s=Val_t/100，Unit Hertz Hz

6.Electrical energy:

For AMC series intelligent power acquisition and monitoring devices, the following methods can be used to read power.

Read address 003FH～0040H (absorbed active energy), 0041H～0042H (release active energy), 0043H～0044H (inductive reactive energy), 0045H～0046H (capacitive reactive energy) secondary energy, read again PT, CT, calculated according to the following formula:

Electrical energy communication readout value Val_t=first word × 65536 + second word

The primary value of electric energy is Val_s=Val_t/1000×PT×CT, the unit of active energy: kilowatt hour (kWh), and the unit of reactive energy: kilowatt hour (kvarh). The PT is read from the address 0003H, and the CT is read from the address 0004H.

Note: In general, the user reads the absorbed active energy.

6.5.3 Event Record

Event record 1st - Event record 16th, recorded in order of time, that is, event record 1st records the data of the event that occurred recently, and event record 16th records the data of the early event. The data format of each event record is shown in Table 11、12:

Table 11 Event record data format 1

	High 8 bits	Low 8 bits
Address 1	Bit 0 (lowest bit): 0 is DO, 1 is DI	Switching serial number:

	7th bit (highest bit): 0 is open and 1 is closed	0 is the first road, 1 is the second road, and so on.
Address 2	Alarm type: see 5.4.3	Combined alarm type note
Address 3	Year	Month
Address 4	Day	Hour
Address 5	Minute	Second
Address 6	The value at the time of the alarm (the minimum value of the three phases is recorded when the phase is broken)	

Note: 0-high voltage, 1-low voltage, 2-high frequency, 3-low frequency, 4-high power, 5-low power, 6-high current, 7-low power factor,8-high voltage Balanced, 9-high current imbalance

Table 12 Event record data format2

	High 8 bits	Low 8 bits
Address 1	Bit 0 (lowest bit): 0 is DO, 1 is DI 7th bit (highest bit): 0 is open and 1 is closed	Switching serial number: 0 is the first road, 1 is the second road, and so on.
Address 2	Alarm type: see 5.4.3	Combined alarm type
Address 3	Year	Month
Address 4	Day	Hour
Address 5	Minute	Second
Address 6	Millisecond	
Address 7	The value at the time of the alarm (the minimum value of the three phases is recorded when the phase is broken)	

Example: DO1 is the A-phase voltage alarm. When the under-voltage alarm occurs at 14:56:32 on January 22, 15th, the alarm value is 172.2V, the corresponding register value is shown in Table.

Table 13

	High 8 bits	Low 8 bits
Address 1	128	0
Address 2	1	0
Address 3	15	1
Address 4	22	14
Address 5	56	32
Address 6	1722	

7 Common fault analysis

Table 14 Common fault analysis and elimination

Fault content	Analysis	Remarks
No display after power on	Check if the power supply voltage is within the operating voltage range	
Voltage, current, power, etc. readings are incorrect	Check if the voltage-to-current ratio setting is correct Check if the wiring mode setting is consistent with the actual	

	Check if voltage transformer, current transformer is intact	
Power or power factor is incorrect	Check if the wiring mode setting is consistent with the actual Check if the voltage and current phase sequence is correct Check if the wiring is correct	
Communication is not normal	Check whether the address, baud rate, check digit, etc. in the communication settings are consistent with the host computer. Check if the RS485 converter is normal Parallel connection of 120 ohms or more at the end of communication Check if the wiring is correct	

Headquarters: Acrel Co., Ltd.

Trade Company: Acrel E-Business(Shanghai)Co., Ltd.

Address: No.253 Yulv Road, Jiading District, Shanghai, China

TEL.: 0086-21-69156352

Web-site: www.acrel-electric.com

E-mail: sales@acrel-electric.com

Postcode: 201801

Manufacturer: Jiangsu Acrel Electrical Manufacturing Co., Ltd.

Address: No.5 Dongmeng Road, Dongmeng industrial Park, Nanzha Street, Jiangyin City, Jiangsu Province, China

TEL./Fax: 0086-510-86179970

Web-site: www.jsacrel.com

E-mail: sales@email.acrel.cn

Postcode: 214405